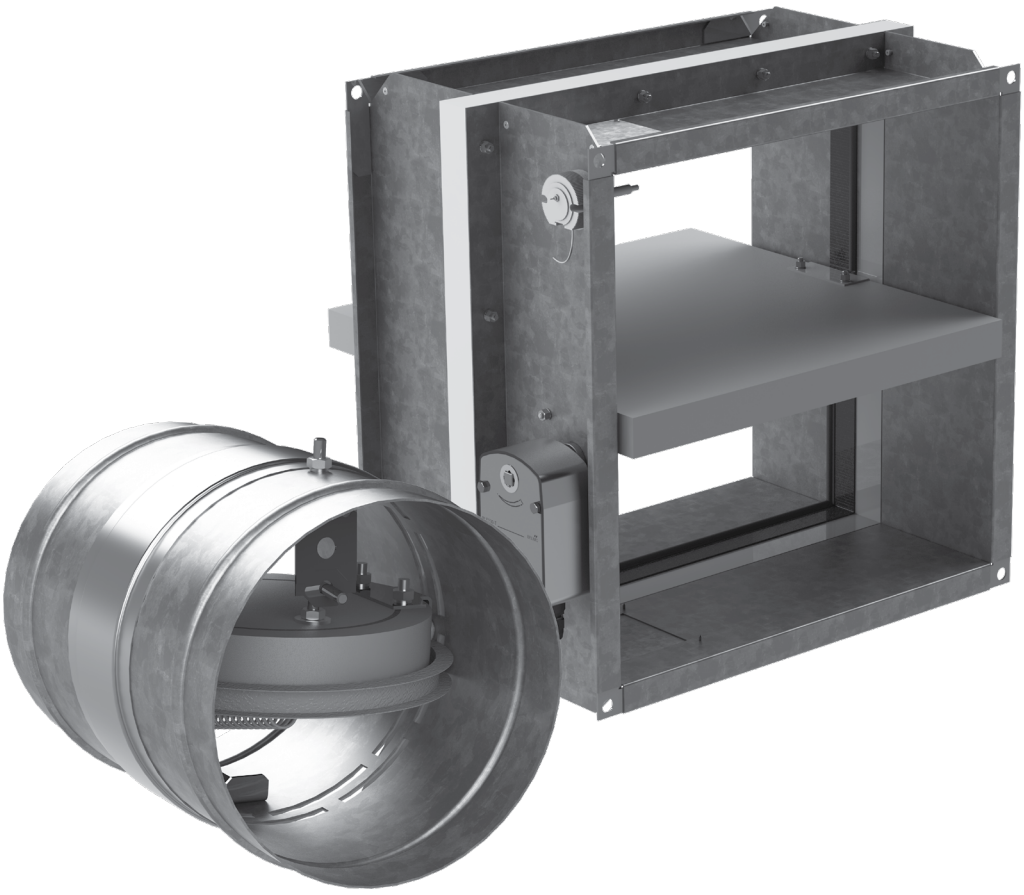

FIRE-RESISTING DUCT DAMPER

BSK

EN USER'S MANUAL

BLAUBERG

CONTENTS

Safety requirements ... 3
Purpose ... 4
Delivery set ... 4
Designation key ... 5
Technical data ... 6
Design and operating principle ... 16
Mounting and set-up ... 17
Connection to power mains ... 46
Technical maintenance ... 47
Storage and transportation regulations ... 47
Manufacturer's warranty ... 48
Certificate of acceptance ... 50
Seller information ... 50
Installation certificate ... 50
Warranty card ... 50

This user's manual is a main operating document intended for technical, maintenance, and operating staff.
The manual contains information about purpose, technical details, operating principle, design, and installation of the BSK unit and all its modifications.
Technical and maintenance staff must have theoretical and practical training in the field of ventilation systems and should be able to work in accordance with workplace safety rules as well as construction norms and standards applicable in the territory of the country.

SAFETY REQUIREMENTS

All operations described in this manual must be performed by qualified personnel only, properly trained and qualified to install, make electrical connections and maintain ventilation units.
Do not attempt to install the product, connect it to the mains, or perform maintenance yourself. This is unsafe and impossible without special knowledge.
Disconnect the power supply prior to any operations with the unit.
All user's manual requirements as well as the provisions of all the applicable local and national construction, electrical, and technical norms and standards must be observed when installing and operating the unit.
Disconnect the unit from the power supply prior to any connection, servicing, maintenance, and repair operations.
Connection of the unit to power mains is allowed by a qualified electrician with a work permit for the electric units up to 1000 V after careful reading of the present user's manual.
Check the unit for any visible damage of the impeller, the casing, and the grille before starting installation. The casing internals must be free of any foreign objects that can damage the impeller blades.
While mounting the unit, avoid compression of the casing! Deformation of the casing may result in motor jam and excessive noise.
Misuse of the unit and any unauthorised modifications are not allowed.
Transported air must not contain any dust or other solid impurities, sticky substances, or fibrous materials.
Do not use the unit in a hazardous or explosive environment containing spirits, gasoline, insecticides, etc.
Do not close or block the intake or extract vents in order to ensure the efficient air flow.
Do not sit on the unit and do not put objects on it.
The information in this user's manual was correct at the time of the document's preparation.
The Company reserves the right to modify the technical characteristics, design, or configuration of its products at any time in order to incorporate the latest technological developments.
Never touch the unit with wet or damp hands.
Never touch the unit when barefoot.
Do not install or use the product until all construction and finishing work has been completed in the room where it is to be installed.
BEFORE INSTALLING ADDITIONAL EXTERNAL DEVICES, READ THE RELEVANT USER MANUALS.

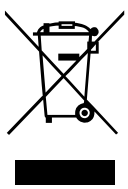

THE PRODUCT MUST BE DISPOSED SEPARATELY AT THE END OF ITS SERVICE LIFE.

DO NOT DISPOSE THE UNIT AS UNSORTED DOMESTIC WASTE.

PURPOSE

Fire dampers serve as a passive fire protection element, which fulfills its function by separating space into zones (sectors) to prevent toxic gases, smoke and fire from spreading. Standard fire dampers are designed and certified in accordance with EN 15650 and their compliance with EIS criteria according to EN 1366-2 is verified. Fire damper, along with its mounting, are an integral part of its fire resistance properties. Fire dampers BSK1, BSK2, BSK-EI60 and BSK-EI120 are designed for the types of mounting stipulated and described herein.

The BSK fire dampers are designed, manufactured and tested in accordance with the following standards:
EN 15650:2019 Ventilation for buildings.
Fire dampers (EN 15650:2010, IDT);
EN 13501-3:2016 Fire classification of construction products and building elements.
Part 3: Classification using data from fire resistance tests on products and elements used in building service installations:
fire resisting ducts and fire dampers (EN 13501-3:2005+A1:2009, IDT).

Product performance has been confirmed by tests in accordance with EN 1366-2:2013 Fire resistance tests for service installations.
Fire dampers (EN 1366-2:1999, IDT).

DELIVERY SET

NAME	NUMBER
Damper	1 pc.
User's manual	1 pc.
Packing box	1 pc.

DESIGNATION KEY

Designation example: **BSK 2 25x25/1 PNP24T/O S**

Series
BSK - Fire-Stopping duct Damper (BrandSchutzKlappe) Normally open General industrial (Allgemeine)

Fire resistance
1 – 1 hour
2 – 2 hours

Damper flow area width
20; 25; 30; 40; 50; 60; 80; 100

Damper flow area height
20; 25; 30; 40; 50; 60; 80; 100

Number of flanges
1 – one
2 – two

Actuator Type
72S – thermal fuse and return spring (manual actuation)
PNP24T – 24 V NENUTEC electric actuator with a return spring and a thermal breaker
PNP230T – 230 V NENUTEC electric actuator with a return spring and a thermal breaker
PVP24T – 24 V BELIMO electric actuator with a return spring and a thermal breaker
PVP230T – 230 V BELIMO electric actuator with a return spring and a thermal breaker
PSP24T – 24 V SIEMENS electric actuator with a return spring and a thermal breaker
PSP230T – 230 V SIEMENS electric actuator with a return spring and a thermal breaker

Placement of the electric drive
O – outside
I – inside (except for dampers with a height or width of less than 300 mm)

Design variant
_ – ordinary damper design;
S – simplified damper design (for BSK2 only)

Designation example: **BSK 1 100 PNP24T**

Series
BSK - Fire-Stopping duct Damper (BrandSchutzKlappe) Normally open

Fire resistance
1 – 1 hour;
2 – 2 hours

Rated damper diameter [mm]
100; 125; 150; 160; 180; 200; 225; 250; 315; 355; 400

Actuator Type
1A – thermal fuse (72 °C), return spring (manual actuation)
PNP24T – 24 V NENUTEC electric actuator with a return spring and a thermal breaker
PNP230T – 230 V NENUTEC electric actuator with a return spring and a thermal breaker
PVP24T – 24 V BELIMO electric actuator with a return spring and a thermal breaker
PVP230T – 230 V BELIMO electric actuator with a return spring and a thermal breaker
PSP24T – 24 V SIEMENS electric actuator with a return spring and a thermal breaker
PSP230T – 230 V SIEMENS electric actuator with a return spring and a thermal breaker

TECHNICAL DATA

Features

- Simple design;
- Casing airtightness class: C;
- Low pressure drop;
- All sizes greater than 200 × 200 mm are equipped with an inspection opening.

Design

The casings of the fire dampers are made of galvanized sheet steel. The blades are made of asbestos-free materials and are equipped with a cold smoke rubber seal and an intumescent seal, which expands in the event of a fire.

Materials

The product contains galvanized sheet metal, a vermiculite / calcium silicate plate, fire-resistant ceramic fiber, ethylene propylene diene monomer rubber.
The materials are made according to local standards.
The product does not contain hazardous substances, except for the solder in the thermal switch containing ~1 mg of lead.

Technical parameters

- Wear resistance test
  – 30 cycles / manual activation mechanism – no changes in the required properties;
  – 10000 cycles / actuator-powered activation mechanism – no changes in the required properties.
- Pressure during fire tests
  – negative pressure down to 300 Pa.
- Fail-safe position
  – CLOSED. (In a fire scenario, the damper is closed by the spring in the actuator or in the manual mechanism).
- Air flow direction
  – both directions.
- Allowed air velocity
  – the damper can operate at air flow velocities higher over ≤12 m/s. The air must be free of any mechanical or chemical contaminants.
- Fire-resistant side
  – based on the classification of mounting: both sides (i↔o).
- Re-opening
  – available for daily inspection;
  – the device cannot operate upon reaching the actuation temperature threshold.
- Actuation temperature
  – manual control: 72 °C by means of spring after the thermal fuse breaks;
  – actuator-based control: 72 °C standard (95 °C or 120 °C upon request) by means of spring after powering off the electric thermal fuse.
- Operating temperature
  – min: 0 °C;
  – max: 55 °C for the 72 °C fuse;
  – max: 80 °C for the 95 °C fuse;
  – max: 100 °C for the 120 °C fuse.
- Ambient environment conditions:
  – protected from weather conditions,with temperatures above 0 °C, up to 95 % Rha, (3K5 according to EN IEC 60721–3–3:2022).
- Opening / closing time
  – manual control < 10 sec.;
  – servo actuator < 20 sec.
- Inspection options
  – by opening the inspection hole cover. For sizes under 200 mm, an inspection opening must be added to the connected air duct.
- Technical maintenance
  – not required.
  Cleaning must be carried out if it is required by the legislation of the country where the air dampers are installed.
- Inspection
  – determined by the legislation of the country where the fire dampers are installed, but at least once a year.
- Allowed pressure
  – 1200 Pa.
- Classification of leakage through a closed blade (EN 1751)
  – class 3 by default for all nominal sizes over 800x800 mm, class 2 for smaller sizes.
- casing airtightness (EN 1751)
  – class C by default.
- Transportation and storage
  dry premise with temperature range from -20 ˚C to +50˚C.

BSK1, BSK2, BSK2S EN 15650 reliability check

Rectangular fire dampers

Conservation of actuation inertia • Load-bearing capacity of the sensing element • Trigger temperature of the sensing element	passed
Response time • closure time	passed
Operational reliability • actuation life: 10 000 actuations • manual mechanism actuation life: 30 actuations	passed

Fire resistance:

BSK1 (ve ho i↔o)S

BSK2, BSK2/S (ve ho i↔o)S

- integrity preservation E
- preservation of heat insulating capacity I
- smoke permeability restriction S

BSK EI60, BSK EI120, EN 15650 reliability check

Round fire dampers

Conservation of actuation inertia • Load-bearing capacity of the sensing element • Trigger temperature of the sensing element	passed
Response time • closure time	passed
Operational reliability • actuation life: 10 000 actuations • manual mechanism actuation life: 30 actuations	passed

Fire resistance:

BSK EI60 (ve ho i↔o)S

BSK EI120 (ve ho i↔o)S

- integrity preservation E
- preservation of heat insulating capacity I
- smoke permeability restriction S

The dampers are designed for operation in spaces with non aggressive environment, the air temperature ranging from 0 °C to +60 °C and relative humidity up to 80 %.
Durability test:
• 50 cycles / manual actuation;
• 10,000 cycles / electric actuator with return spring.
Ingress protection rating against access to hazardous parts and water ingress is IPX4.
In terms of electric shock hazard the products belong to the following categories of electrical appliances:
- Class III (low voltage) for the dampers with 24 V electric actuator power supply.
- Class II (complete insulation) for the dampers with 230 V electric actuator power supply.

The dampers may not be integrated:
- Into air ducts and on premises rated explosion and fire safety category A and B.
- Into air ducts of local intakes for flammable and explosive mixtures.
- Into systems which do not undergo periodic cleaning pursuant to an approved schedule to prevent the build-up of combustible deposits.

The damper undergoes continuous improvement. Therefore, some models may slightly differ from the ones described herein.

Overall and connecting dimensions of BSK1...72S dampers with a return spring

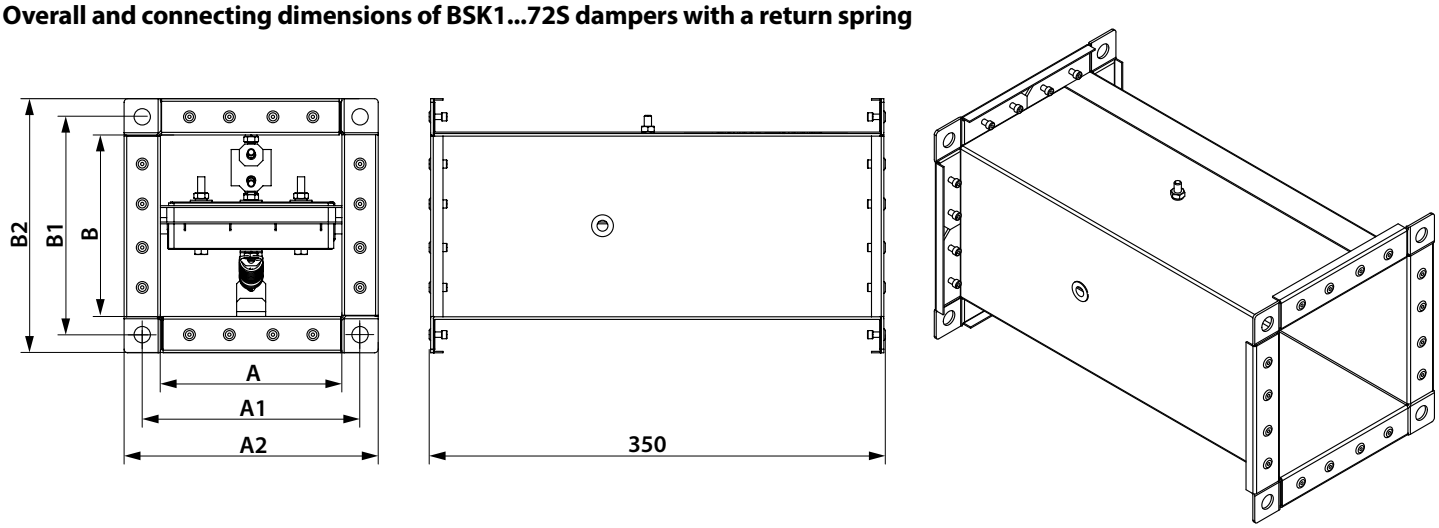

Model	Dimensions [mm]						Weight [kg]
	A	A1	A2	B	B1	B2	
BSK1 20x20/2 72S	200	220	240	200	220	240	3.5
BSK1 25x20/2 72S	250	270	290	200	220	240	4
BSK1 25x25/2 72S	250	270	290	250	270	290	4.5
BSK1 30x20/2 72S	300	320	340	200	220	240	4.5
BSK1 30x25/2 72S	300	320	340	250	270	290	5.1
BSK1 30x30/2 72S	300	320	340	300	320	340	5.8
BSK1 40x25/2 72S	400	420	440	250	270	290	6.3
BSK1 40x30/2 72S	400	420	440	300	320	340	7.1
BSK1 40x40/2 72S	400	420	440	400	420	440	8.7
BSK1 50x30/2 72S	500	520	540	300	320	340	8.5
BSK1 50x40/2 72S	500	520	540	400	420	440	10.3
BSK1 50x50/2 72S	500	520	540	500	520	540	12
BSK1 60x40/2 72S	600	620	640	400	420	440	11.9
BSK1 60x50/2 72S	600	620	640	500	520	540	13.8
BSK1 60x60/2 72S	600	620	640	600	620	640	16.1

Dampers with dimensions not included in the table can be produced on request.

Overall and connecting dimensions of BSK1...PNP/BSK1...PVP/BSK1...PSP dampers with electric actuators

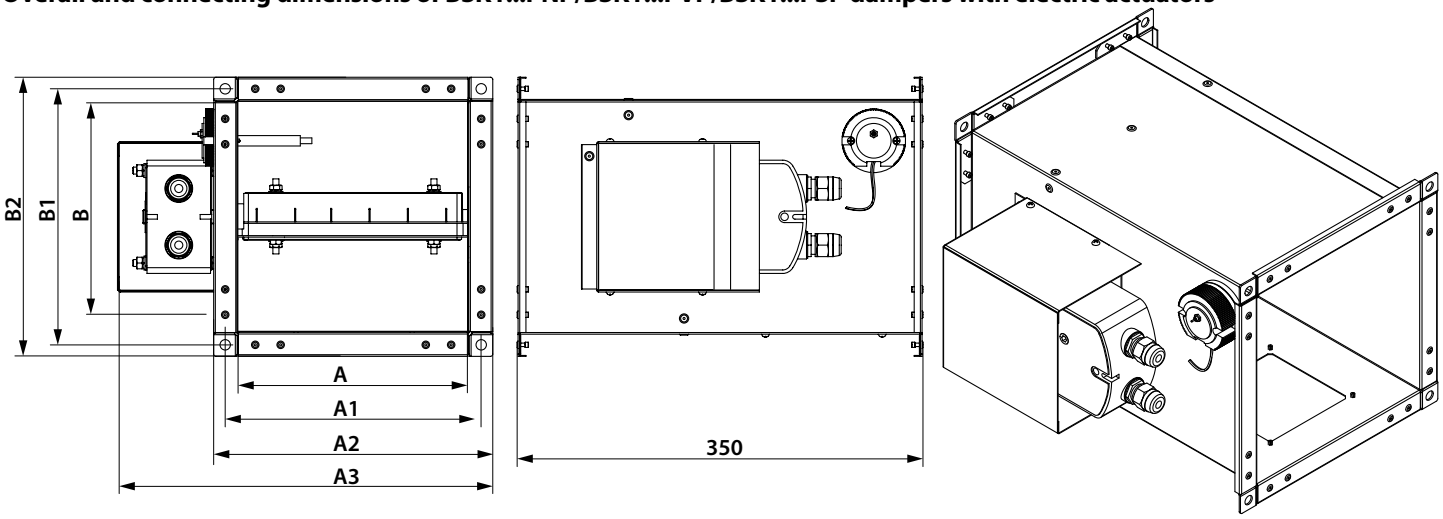

Model	Dimensions [mm]							Weight [kg]
	A	A1	A2	A3	B	B1	B2	
BSK1 20x20/2 …/O	200	220	240	325	200	220	240	6.2
BSK1 25x20/2 …/O	250	270	290	375	200	220	240	6.8
BSK1 25x25/2 …/O	250	270	290	375	250	270	290	7.3
BSK1 30x20/2 …/O	300	320	340	425	200	220	240	7.3
BSK1 30x25/2 …/O	300	320	340	425	250	270	290	7.9
BSK1 30x30/2 …/O	300	320	340	425	300	320	340	8.5
BSK1 40x25/2 …/O	400	420	440	525	250	270	290	9.1
BSK1 40x30/2 …/O	400	420	440	525	300	320	340	9.8
BSK1 40x40/2 …/O	400	420	440	525	400	420	440	11.3
BSK1 50x30/2 …/O	500	520	540	625	300	320	340	10.7
BSK1 50x40/2 …/O	500	520	540	625	400	420	440	12.9
BSK1 50x50/2 …/O	500	530	560	635	500	530	560	16.6
BSK1 60x40/2 …/O	600	620	640	725	400	420	440	14.5
BSK1 60x50/2 …/O	600	630	660	735	500	530	560	18.4
BSK1 60x60/2 …/O	600	630	660	735	600	630	660	20.6
BSK1 80x50/2 …/O	800	830	860	935	500	530	560	22.3
BSK1 80x60/2 …/O	800	830	860	935	600	630	660	24.8
BSK1 80x80/2 …/O	800	830	860	935	800	830	860	30.1
BSK1 100x60/2 …/O	1000	1030	1060	1135	600	630	660	29
BSK1 100x80/2 …/O	1000	1030	1060	1135	800	830	860	35.4
BSK1 100x100/2 …/O	1000	1030	1060	1135	1000	1030	1060	41.7

Note: The values given in the table for dampers with 230 V actuators are identical for those equipped with 24 V actuators.
Dampers with dimensions not included in the table can be produced on request.

Overall and connecting dimensions of BSK2...72S dampers with a mechanical actuator

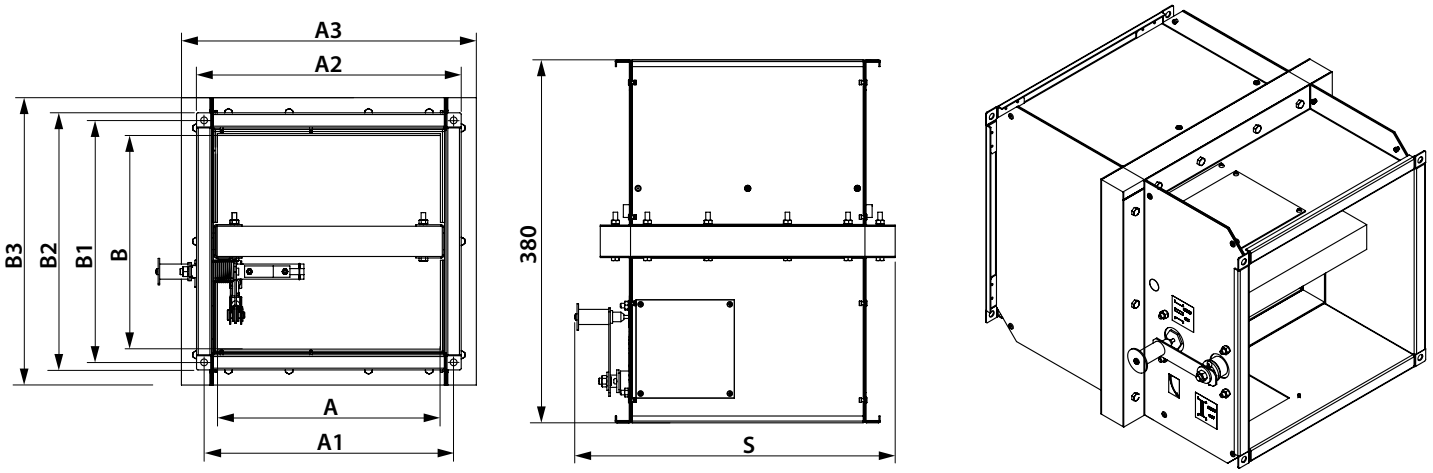

Model	Dimensions [mm]									Weight [kg]
	A	A1	A2	A3	B	B1	B2	B3	S	
BSK2 20x20/2 72S	200	220	240	280	200	220	240	280	315	12
BSK2 25x20/2 72S	250	270	290	330	200	220	240	280	365	13
BSK2 25x25/2 72S	250	270	290	330	250	270	290	330	365	14.1
BSK2 30x20/2 72S	300	320	340	380	200	220	240	280	415	14
BSK2 30x25/2 72S	300	320	340	380	250	270	290	330	415	15.3
BSK2 30x30/2 72S	300	320	340	380	300	320	340	380	415	18.8
BSK2 40x25/2 72S	400	420	440	480	250	270	290	330	515	19.2
BSK2 40x30/2 72S	400	420	440	480	300	320	340	380	515	19.7
BSK2 40x40/2 72S	400	420	440	480	400	420	440	480	515	22
BSK2 50x30/2 72S	500	520	540	580	300	320	340	380	615	22.5
BSK2 50x40/2 72S	500	520	540	580	400	420	440	480	615	24.7
BSK2 50x50/2 72S	500	520	540	580	500	520	540	580	615	29.8
BSK2 60x40/2 72S	600	620	640	680	400	420	440	480	715	29.7
BSK2 60x50/2 72S	600	620	640	680	500	520	540	580	715	36
BSK2 60x60/2 72S	600	620	640	680	600	620	640	680	715	38

Dampers with dimensions not included in the table can be produced on request.

Overall and connecting dimensions of BSK2...PNP/BSK2...PVP/BSK2...PSP dampers with electric actuators

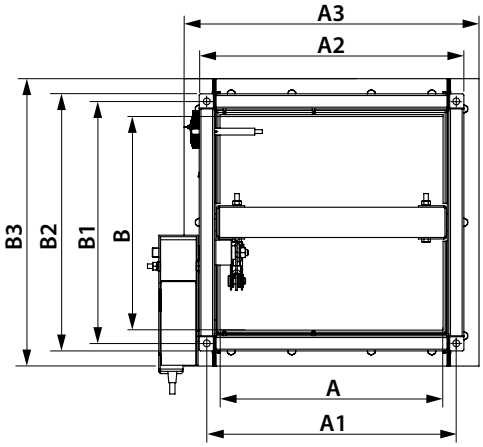

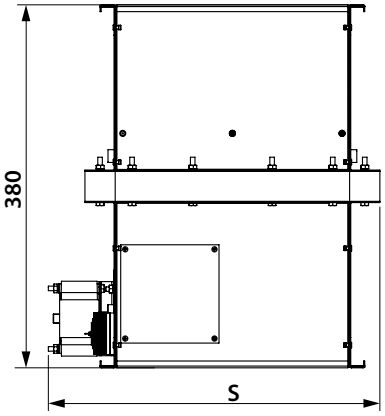

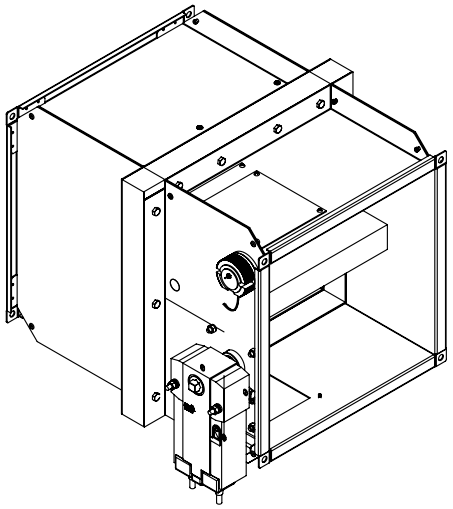

Model	Dimensions [mm]									Weight [kg]
	A	A1	A2	A3	B	B1	B2	B3	S	
BSK2 20x20/2 …/O	200	220	240	280	200	220	240	280	340	13.3
BSK2 25x20/2 …/O	250	270	290	330	200	220	240	280	390	14.3
BSK2 25x25/2 …/O	250	270	290	330	250	270	290	330	390	15.4
BSK2 30x20/2 …/O	300	320	340	380	200	220	240	280	440	15.3
BSK2 30x25/2 …/O	300	320	340	380	250	270	290	330	440	16.6
BSK2 30x30/2 …/O	300	320	340	380	300	320	340	380	440	20.1
BSK2 40x25/2 …/O	400	420	440	480	250	270	290	330	540	20.5
BSK2 40x30/2 …/O	400	420	440	480	300	320	340	380	540	21
BSK2 40x40/2 …/O	400	420	440	480	400	420	440	480	540	23.3
BSK2 50x30/2 …/O	500	520	540	580	300	320	340	380	640	23.8
BSK2 50x40/2 …/O	500	520	540	580	400	420	440	480	640	26
BSK2 50x50/2 …/O	500	530	560	580	500	530	560	580	650	33
BSK2 60x40/2 …/O	600	620	640	680	400	420	440	480	740	32.7
BSK2 60x50/2 …/O	600	630	660	680	500	530	560	580	750	38.4
BSK2 60x60/2 …/O	600	630	660	680	600	630	660	680	750	43
BSK2 80x50/2 …/O	800	830	860	880	500	530	560	580	950	47
BSK2 80x60/2 …/O	800	830	860	880	600	630	660	680	950	52
BSK2 80x80/2 …/O	800	830	860	880	800	830	860	880	950	63
BSK2 100x60/2 …/O	1000	1030	1060	1080	600	630	660	680	1150	63
BSK2 100x80/2 …/O	1000	1030	1060	1080	800	830	860	880	1150	75
BSK2 100x100/2 …/O	1000	1030	1060	1080	1000	1030	1060	1080	1150	87

Note: The values given in the table for dampers with 230 V actuators are identical for those equipped with 24 V actuators.
Dampers with dimensions not included in the table can be produced on request.

Overall and connecting dimensions of BSK2...PNP...S/BSK2...PVP...S/BSK2...PSP...S dampers with electric actuators

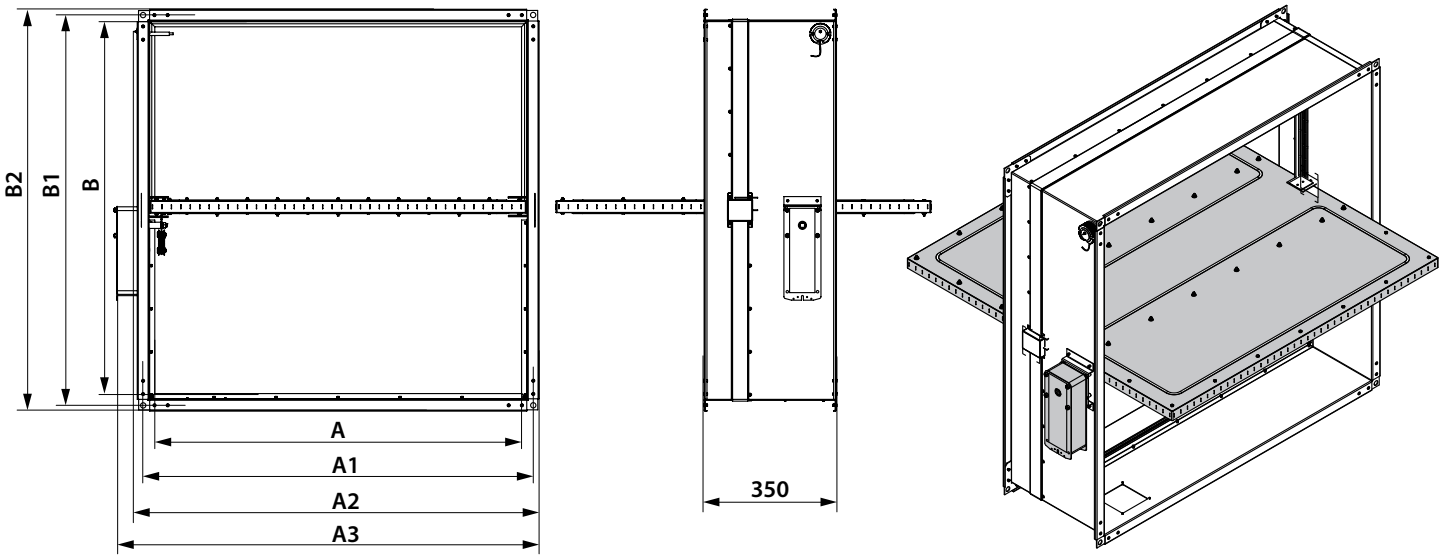

Model	Dimensions [mm]							Weight [kg]
	A	A1	A2	A3	B	B1	B2	
BSK2 20x20/2 …/O S	200	220	240	340	200	220	240	5.7
BSK2 25x20/2 …/O S	250	270	290	390	200	220	240	6.2
BSK2 25x25/2 …/O S	250	270	290	390	250	270	290	6.9
BSK2 30x20/2 …/O S	300	320	340	440	200	220	240	6.8
BSK2 30x25/2 …/O S	300	320	340	440	250	270	290	7.5
BSK2 30x30/2 …/O S	300	320	340	440	300	320	340	9.2
BSK2 40x25/2 …/O S	400	420	440	540	250	270	290	9
BSK2 40x30/2 …/O S	400	420	440	540	300	320	340	10.8
BSK2 40x40/2 …/O S	400	420	440	540	400	420	440	12.6
BSK2 50x30/2 …/O S	500	520	540	640	300	320	340	12.3
BSK2 50x40/2 …/O S	500	520	540	640	400	420	440	14.3
BSK2 50x50/2 …/O S	500	530	560	650	500	530	560	23
BSK2 60x40/2 …/O S	600	620	640	740	400	420	440	16.2
BSK2 60x50/2 …/O S	600	630	660	750	500	530	560	25.6
BSK2 60x60/2 …/O S	600	630	660	750	600	630	660	28.6
BSK2 80x50/2 …/O S	800	830	860	950	500	530	560	31.3
BSK2 80x60/2 …/O S	800	830	860	950	600	630	660	34.7
BSK2 80x80/2 …/O S	800	830	860	950	800	830	860	42
BSK2 100x60/2 …/O S	1000	1030	1060	1150	600	630	660	40.7
BSK2 100x80/2 …/O S	1000	1030	1060	1150	800	830	860	50.2
BSK2 100x100/2 …/O S	1000	1030	1060	1150	1000	1030	1060	58

Note: The values given in the table for dampers with 230 V actuators are identical for those equipped with 24 V actuators.
Dampers with dimensions not included in the table can be produced on request.

The BSK-1A fire safety damper with a mechanical actuating unit, a thermal fuse and a return spring

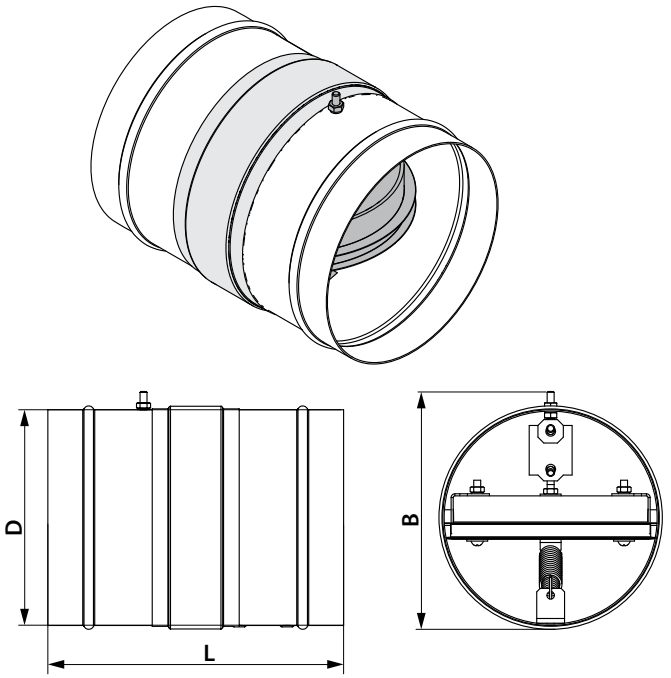

The BSK...PNP/BSK...PVP/BSK...PSP fire safety damper with an electric actuator and a thermally sensitive breaker

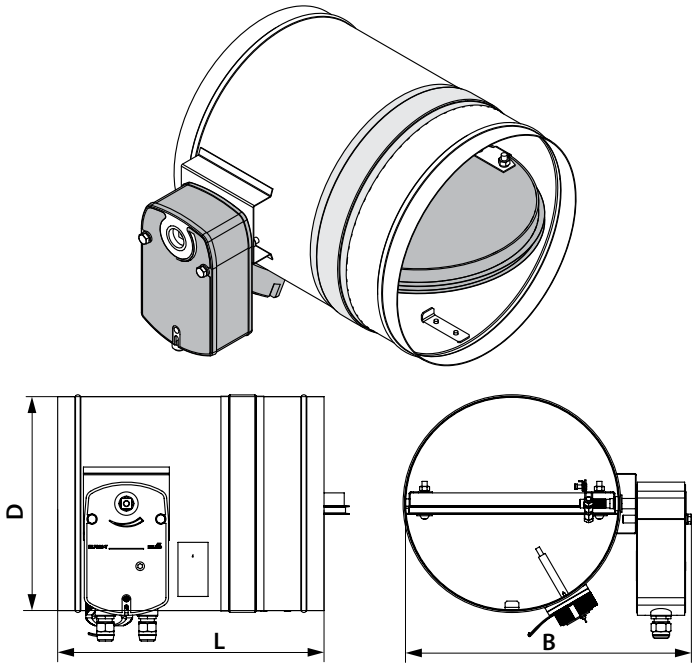

Model	Dimensions [mm]			Weight [kg]
	Ø D	L	B	
BSK…100 1A	99	170	112	1
BSK…125 1A	124	170	137	1.2
BSK…150 1A	149	170	162	1.5
BSK…160 1A	159	170	172	1.6
BSK…180 1A	179	170	192	1.8
BSK…200 1A	199	170	212	2
BSK…225 1A	224	170	237	2.2
BSK…250 1A	249	190	262	2.5
BSK…315 1A	314	190	327	3.6
BSK…355 1A	354	190	367	4.4
BSK…400 1A	399	240	412	6

Model	Dimensions [mm]			Weight [kg]
	Ø D	L	B	
BSK…100 PNP(PVP, PSP)	99	300	195	2.9
BSK…125 PNP(PVP, PSP)	124	300	215	3.1
BSK…150 PNP(PVP, PSP)	149	300	245	3.4
BSK…160 PNP(PVP, PSP)	159	300	255	3.5
BSK…180 PNP(PVP, PSP)	179	300	275	3.8
BSK…200 PNP(PVP, PSP)	199	300	295	4
BSK…225 PNP(PVP, PSP)	224	300	325	4.4
BSK…250 PNP(PVP, PSP)	249	310	345	4.7
BSK…315 PNP(PVP, PSP)	314	310	415	6.5
BSK…355 PNP(PVP, PSP)	354	310	455	8.3
BSK…400 PNP(PVP, PSP)	399	310	505	9.9

Dampers with dimensions not included in the table can be produced on request.

Main technical specifications of Belimo electric actuators with a return spring and a thermal breaker

Technical data	Basic models		Models with higher torque		Models with the highest torque	
Rated operation voltage	AC/DC 24 V	AC 230 V	AC/DC 24 V	AC 230 V	AC/DC 24 V	AC 230 V
Permissible operating voltage tolerance	AC 19.2…28.8 V DC 21.6…28.8 V	AC 198…264 V	AC 19.2…28.8 V DC 21.6…28.8 V	AC 198…264 V	AC 19.2…28.8 V DC 21.6…28.8 V	AC 198…264 V
AC mains frequency	50/60 Hz					
Power consumption at rest [W]	0.8	1.1	1.4	2.1	2	3
Power consumption in operation [W]	2.5	3.5	4	5	7	8.5
Maximum design capacity [VA]	4	6.5	6	10	10	11
Motor torque [Nm]	4		9		18	
Spring torque [Nm]	3		7		12	
Protection class	III	II	III	II	III	II
Ingress protection rating	IP54					
Auxiliary switches	2 pcs., single-pole, reversible 1 mA…3 (0.5) A, AC 250 V				2 pcs., single-pole, reversible, 1 mA…6(3)A, AC 250 V	
Electric motor connection cable	1 m, 2 x 0.75 mm² (halogen-free)					
Auxiliary switch connection cable	1 m, 6 x 0.75 mm² (halogen-free)					
Running time spring	20 seconds at -10…+55 °C < 60 seconds at -30…-10 °C				16 seconds at +20 °C	
Running time motor	< 60 s/90°				< 120 s/90°	
Response temperature of thermal breaker sensors	Duct sensor 72 °C Outdoor sensor 72 °C					
Technical maintenance	Not required					

Main technical specifications of Nenutec electric actuators with a return spring and a thermal breaker

Technical data	Basic models		Models with higher torque		Models with the highest torque	
Rated operation voltage	AC/DC 24 V	AC 230 V	AC/DC 24 V	AC 230 V	AC/DC 24 V	AC 230 V
Permissible operating voltage tolerance	AC/DC 21,8...26,4 V	AC 209...253 V	AC/DC 21,8...26,4 V	AC 209...253 V	AC/DC 21,8...26,4 V	AC 209...253 V
AC mains frequency	50/60 Hz					
Power consumption at rest [W]	3,5		3,5		3,5	
Power consumption in operation [W]	5		5		12	
Maximum design capacity [VA]	7		7		14	
Motor torque [Nm]	5		8		20	
Spring torque [Nm]						
Protection class	III	II	III	II	III	II
Ingress protection rating	IP54					
Auxiliary switches	2 pcs., single-pole, reversible, 3 (1,5) A, AC 250 V					
Electric motor connection cable	1 m, 2 x 0,75 mm² (halogen-free)					
Auxiliary switch connection cable	1 m, 6 x 0,75 mm² (halogen-free)					
Running time	< 70 c (return spring < 25 s)		< 120 c (return spring < 25 s)		< 70 c (return spring < 35 s)	
Response temperature of thermal breaker sensors	Duct sensor 72 °C					
	Outdoor sensor 72 °C					
Technical maintenance	60 000 cycles					

Main technical specifications of Siemens electric actuators with a return spring and a thermal breaker

Technical data	Basic models		Models with higher torque		Models with the highest torque	
Rated operation voltage	AC 24 V/ DC 24…48 V	AC 230 V	AC 24 V/ DC 24…48 V	AC 230 V	AC 24 V/ DC 24…48 V	AC 230 V
Permissible operating voltage tolerance	AC/DC ±20 %	AC ±15 %	AC/DC ±20 %	AC ±15 %	AC/DC ±20 %	AC ±15 %
AC mains frequency	50/60 Hz					
Power consumption at rest [W]	2	3.5	2	3.5	3	4
Power consumption in operation [W]	3.5	4.5	3.5	4.5	5	6
Maximum design capacity [VA]	5	7	5	7	7	8
Motor torque [Nm]	4		9		18	
Spring torque [Nm]	4		7		18	
Protection class	III	II	III	II	III	II
Ingress protection rating	IP54					
Auxiliary switches	2 pcs., single-pole, reversible, 6(2)A, AC 24...250 V					
Electric motor connection cable	0.9 m, 2 x 0.75 mm^2 (halogen-free)					
Auxiliary switch connection cable	0.9 m, 6 x 0.75 mm^2 (halogen-free)					
Running time spring	15 seconds < 60 seconds at -30…-10 °C					
Running time motor	90 s/90°					
Response temperature of thermal breaker sensors	Duct sensor 72 °C Outdoor sensor 72 °C					
Service life	10 000 emergency positions					
Technical maintenance	Not required					

DESIGN AND OPERATING PRINCIPLE

BSK1...72S fire safety damper with a mechanical actuating unit with a thermal fuse and a return spring

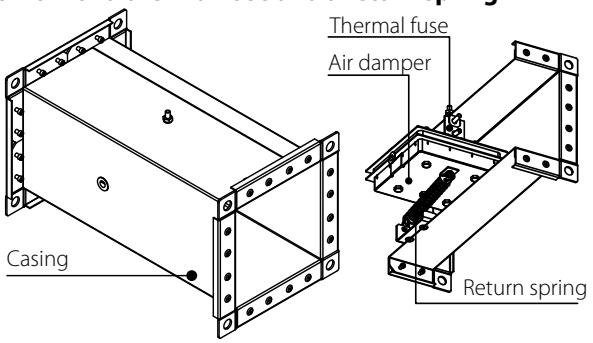

BSK1...PNP/BSK1...PVP/BSK1...PSP fire safety damper with electric actuator and a thermoelectric breaker

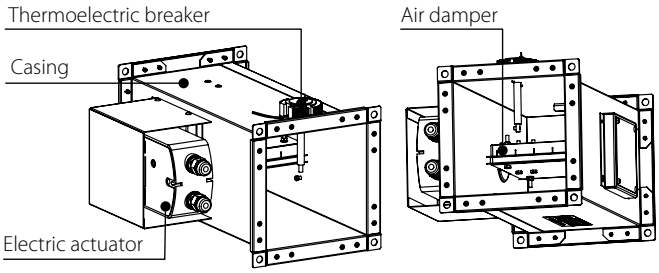

The BSK2...72S fire safety damper with a mechanical actuating unit with a thermal fuse and a return spring

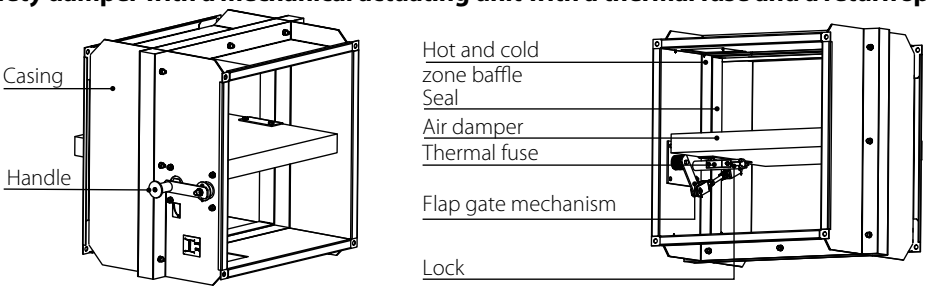

The BSK2...PNP/BSK2...PVP/BSK2...PSP fire safety damper with electric actuator and thermoelectric breaker

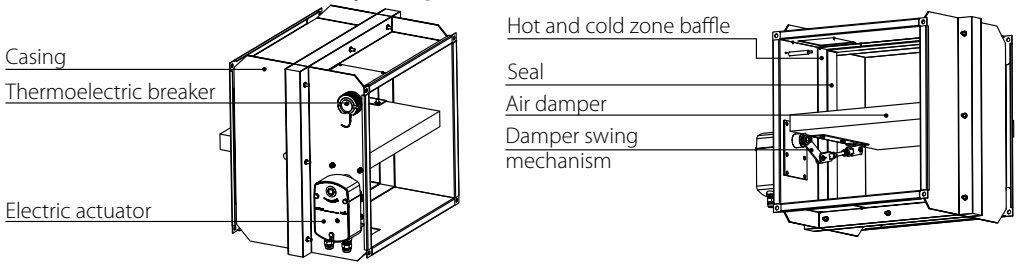

The BSK2...PNP...S/BSK2...PVP...S/BSK2...PSP...S fire safety damper with a Belimo electric actuator and thermoelectric breaker

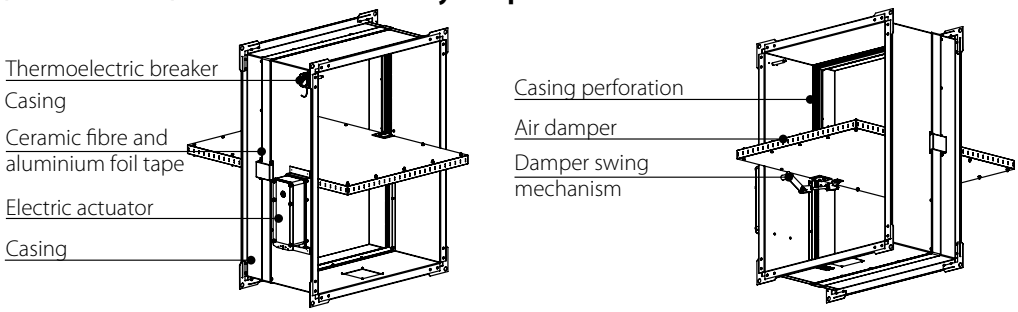

The BSK...SA fire safety damper with a mechanical actuating unit, a thermal fuse and a return spring

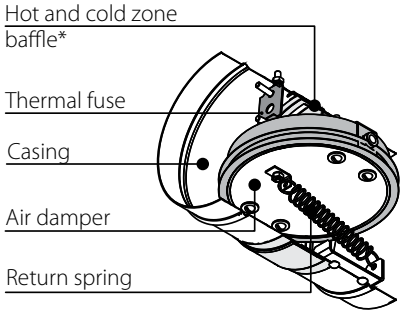

*Only for dampers with a fire-resistance level of 2 hours (EI 120).

The BSK...PNP/BSK...PVP/BSK...PSP fire safety damper with an electric actuator and a thermoelectric breaker

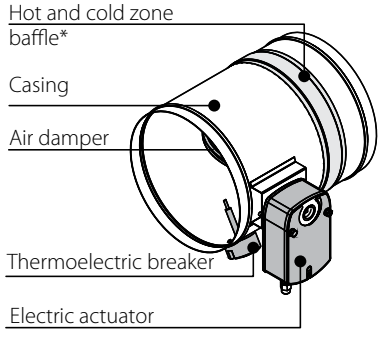

*Only for dampers with a fire-resistance level of 2 hours (EI 120).

MOUNTING AND SET-UP

Mounting methods

1 Wet	BSK1, BSK2S 100x100… …1000x1000	EI 60 (ve ho i↔o) S EI 120 (ve ho i↔o) S	a) 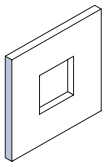	b) 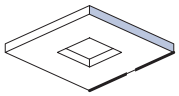	c) 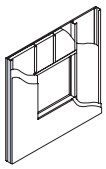	 * ≤ 800×800
2 Dry	BSK1 100x100… …1000x1000	EI 60 (ve ho i↔o) S	a) 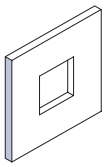	b) 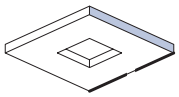	c) 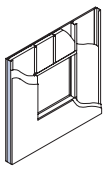	 * ≤ 800×800
3 Surface	BSK1 100x100… …1000x1000	EI 60 (ve i↔o) S	a) 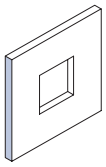	b) 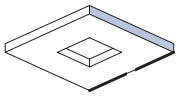	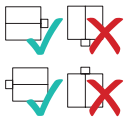	
4 Cassette	BSK1 100x100… …1000x1000	EI 60 (ve i↔o) S	a) 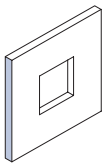	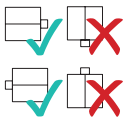		
5 Wet	BSK EI60, BSKEI120 Ø100…Ø400	EI 60 (ve ho i↔o) S EI 120 (ve ho i↔o) S	a) 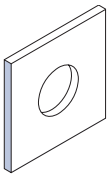	b) 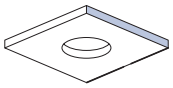	c) 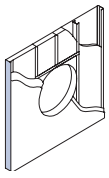	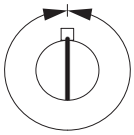 360°
6 Dry	BSK EI60 Ø100…Ø400	EI 60 (ve ho i↔o) S	a) 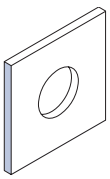	b) 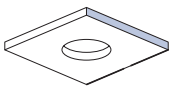	c) 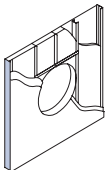	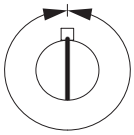 360°
7 Surface	BSK EI60, Ø100…Ø400	EI 60 (ve i↔o) S	a) 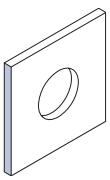	c) 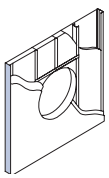	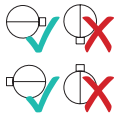	

Explanation:

1. Wet – installation using plaster /mortar / concrete filling;
2. Dry – installation using cladding and mineral wool filling.
3. Surface – connection of the EI60S damper to the wall using Promatect plates.
4. Cassette – installation of multiple EI60S-class dampers using the BSK1 EI60S fire damper kit.
a) – concrete / masonry / aerated concrete wall (rigid);
b) – floor / ceiling made of concrete / aerated concrete (rigid);
c) – flexible (drywall) wall;
v_e – vertical wall;
h_o – horizontal floor / ceiling.

Installation, maintenance and commissioning

Some parts may have sharp edges, so in order to protect yourself from injury, wear gloves when installing and handling the damper.
To prevent electric shock, fire, or any other damage that may result from improper use and operation of the damper, it is important to:
1. Ensure that the damper is installed by an appropriately qualified person.
2. Carefully follow the written and illustrated instructions stipulated herein.
3. Check the damper as described in the manual.
4. Check the fire damper function before installing as described in the "Checking the fire damper function" section.
The procedure is designed to prevent a damper that was damaged during transportation from being installed.
The information about installation, maintenance and operation of the damper is available in this document.

- **Installation rules:**
  – the air duct connected to the fire damper shall be supported or suspended so that the load of its weight is not distributed onto the damper itself.
  The damper shall not be used as support for any part of the nearby structure or wall, which may cause damage resulting in breaking the damper.
  It is recommended to connect the damper to the expansion joint (flexible joint) on both ends of the damper.
  – the damper's actuation mechanism can be located on any side of the wall. However, when positioning, sufficient space must be ensured for easy inspection.
  – the distance in between the casings of fire dampers must be at least 200 mm in accordance with EN 1366–2;
  – the distance between the wall / ceiling and the fire damper must be at least 75 mm;
  – the fire damper must be installed in the structure of the fire barrier in such a way that, when closed, the damper remains inside the structure.
  This does not apply to surface mounting;
  – the minimum thickness of the support structures of each of the dampers cannot be cut down to at least that of the mounting opening plus a 200 mm overlap.
  – the distance between the fire damper and the wall / ceiling within the mounting opening can be increased to 50 % of the gap's area or cut down to the smallest possible value that would be sufficient to ensure enough space to apply the filling.



IN ACCORDANCE WITH EN 15650, EACH FIRE DAMPER MUST BE INSTALLED ACCORDING TO THE INSTALLATION INSTRUCTIONS PROVIDED BY THE MANUFACTURER!

- **WET INSTALLATION**

Using plaster / mortar / concrete filling

While applying the filling, it is important to use a support inside the damper (wooden blocks or telescopic air duct supports).

The weight of the filling may damage or deform the damper's casing.

1. The opening of the support structure must be prepared as illustrated by the figure. The gap surfaces must be smooth and clean. The opening in the flexible (drywall) wall must be enhanced according to the relevant standards. The dimensions of the opening are determined based on the nominal dimensions of the damper, accounting for the additional gap. The opening for rectangular dampers will have the dimensions W+120 and H+120; for round dampers – D+120.
2. Insert the closed damper (1) inside the opening so that the blade of the damper is in the wall. Use mounting brackets (2) (or wooden pegs) to even out the damper inside the wall gap.
3. It is recommended to use an air duct support inside a damper whose thickness is over 800 mm to avoid any damage or damper casing deformation due to the weight of the filling.
4. Fill up the space between the wall and the fire damper with plaster, mortar or concrete (M1). Make sure to avoid soiling the functional parts of the damper (1), which could impair its proper functioning. The best option is to cover the functional parts entirely while mounting. The filling can be prevented from flowing out by using plates. However, they are not required for further wet installation.

First, let the plaster / mortar / concrete solidify, then take the following steps:

5. After the filling (M1) has solidified, remove the air duct support from the inner side of the fire damper.
6. Open and clean the damper after installing it if necessary.
7. Ensure the fire damper functions as intended.

Standard mounting distances

The minimum distance from the wall or the ceiling to the fire damper is 75 mm according to EN 1366-2. For multiple passages through a fire-resistant wall, the minimum distance between two damper casings is 200 mm. This also concerns the distances between the fire damper and an adjacent foreign object crossing the fire-resistant wall.

Mounting in a wall thinner than the tested one

It is possible to mount it into a thinner wall, as long as an additional layer(-s) of fire-resistant plates is attached to the wall surface to achieve the same mounting depth as the value used when testing. The minimum width of the additional plates around the damper is 200 mm. Besides, the alternative (thinner) wall must be categorized in accordance with EN 13501-2:2016 by fire resistance. The value must be sufficient to justify the use of the product. In case of a flexible wall, the extra layers must be secured on the steel structure of the wall.

 1 Wet	BSK1, BSK2 BSK2S 100x100… …1000x1000	EI 60 (ve ho i↔o) S	a) 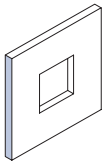	b) 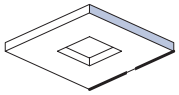	c) 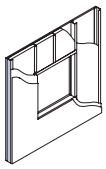	 * ≤ 800×800
		EI 120 (ve ho i↔o) S				

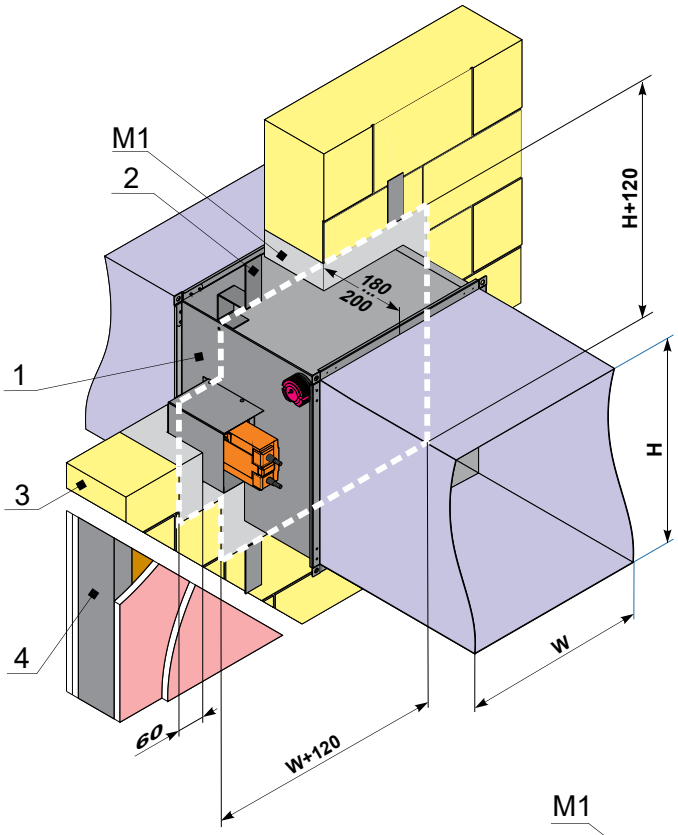

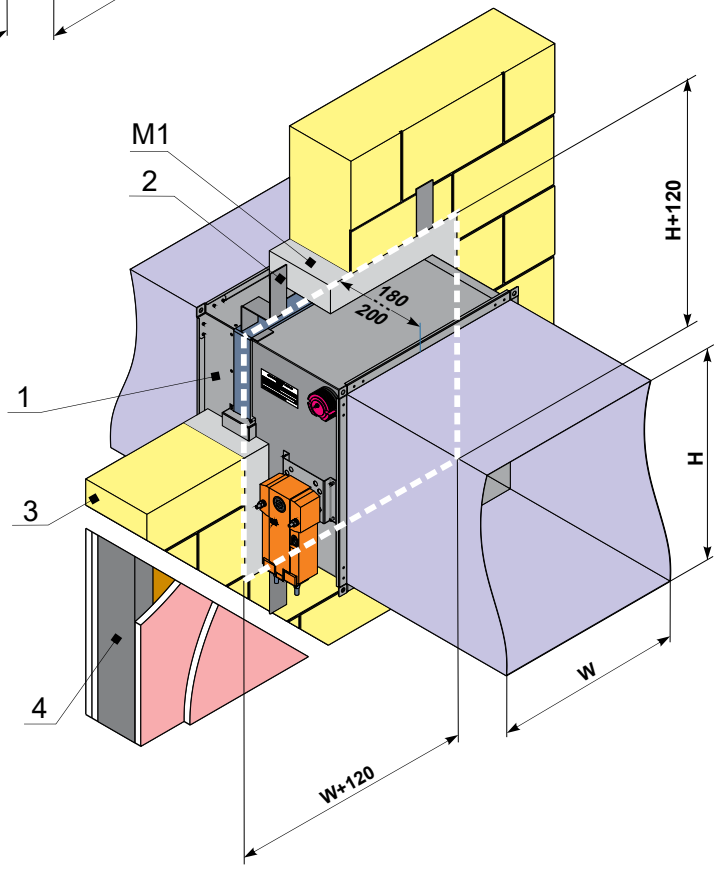

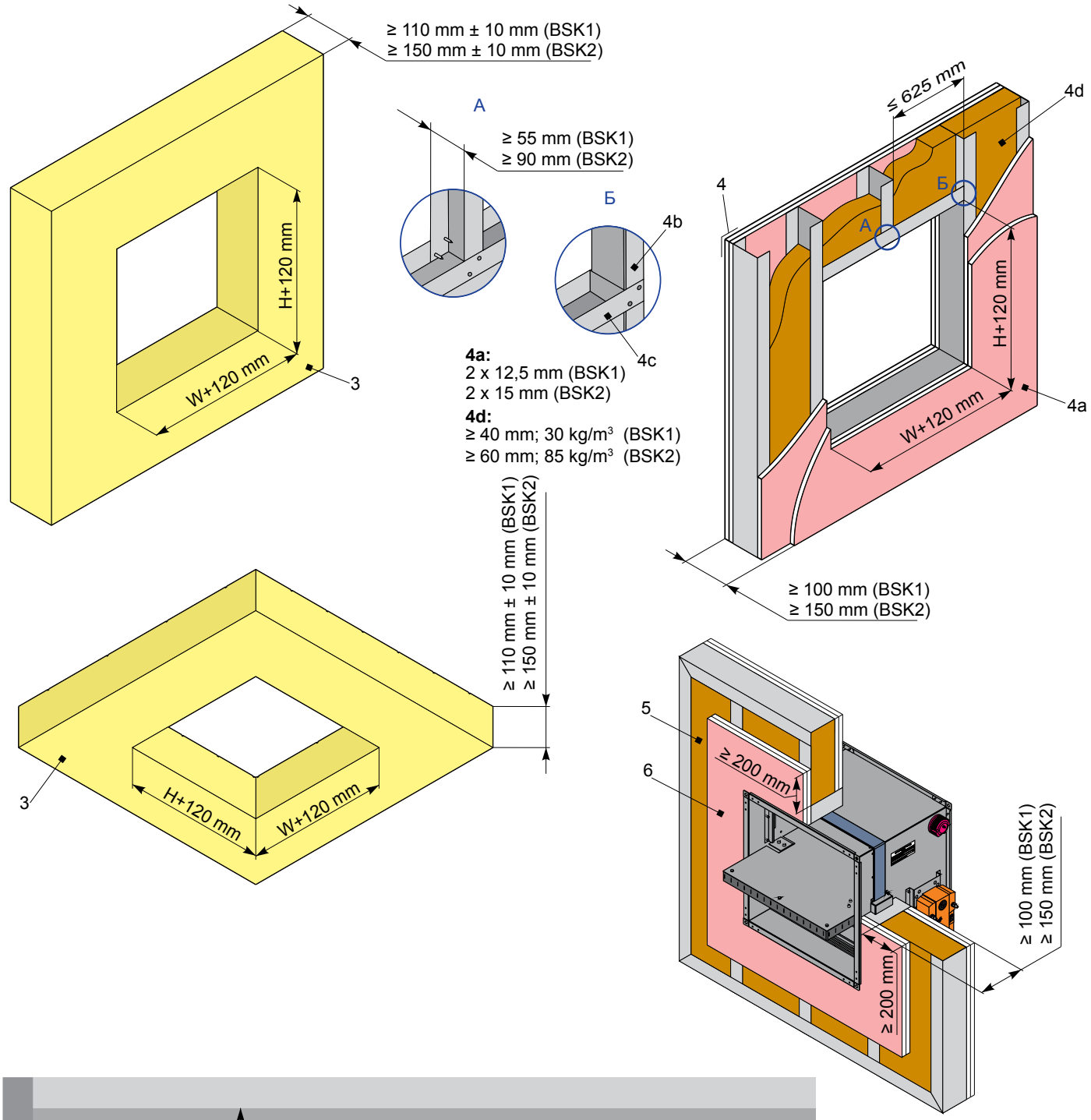
≥ 110 mm ± 10 mm (BSK1)
≥ 150 mm ± 10 mm (BSK2)
H+120 mm
W+120 mm
3
A
≥ 55 mm (BSK1)
≥ 90 mm (BSK2)
Б
4b
4c
4a:
2 x 12,5 mm (BSK1)
2 x 15 mm (BSK2)
4d:
≥ 40 mm; 30 kg/m³ (BSK1)
≥ 60 mm; 85 kg/m³ (BSK2)
≤ 625 mm
4d
4
Б
A
H+120 mm
W+120 mm
4a
≥ 100 mm (BSK1)
≥ 150 mm (BSK2)
≥ 110 mm ± 10 mm (BSK1)
≥ 150 mm ± 10 mm (BSK2)
3
H+120 mm
W+120 mm
5
6
≥ 200 mm
≥ 100 mm (BSK1)
≥ 150 mm (BSK2)
≥ 200 mm

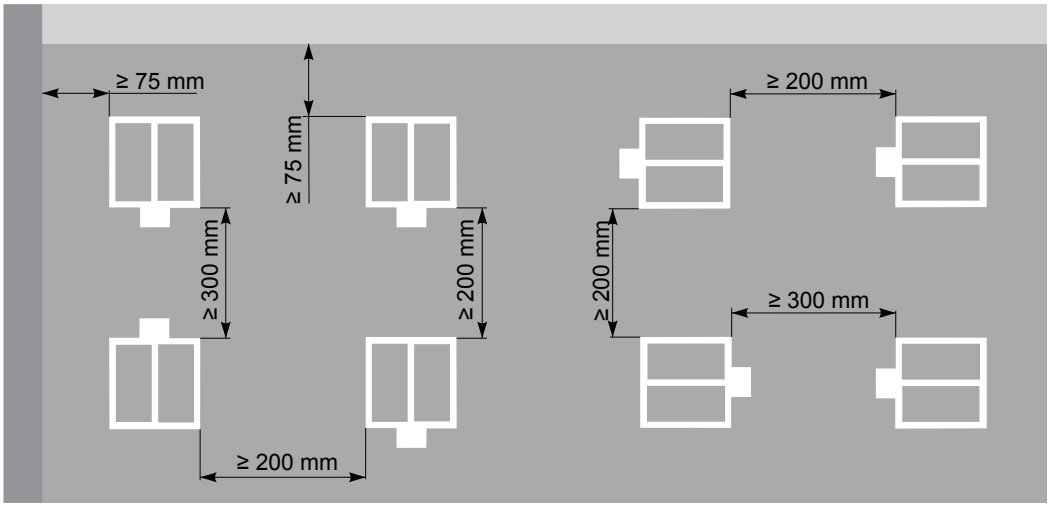
≥ 75 mm
≥ 75 mm
≥ 300 mm
≥ 200 mm
≥ 200 mm
≥ 200 mm
≥ 300 mm
≥ 200 mm

SPECIFICATION

M1. Plaster / mortar / concrete.

1 Fire damper

2 Mounting bracket (not included in the delivery set).

3 Wall or on ceiling made of concrete / masonry / aerated concrete.

4. Flexible (drywall) wall.

4a Two layers of drywall F-type, EN 520 fire-resistant plate.

4b Vertical drywall CW studs.

4c Horizontal drywall CW studs.

4d Mineral wool; for thickness / density see the figure.

5 Alternative (thinner) wall (whose fire resistance is categorized in accordance with EN 13501 -2:2007 + A1:2009 sufficient to justify the use of the product).

6 The area up to a distance of 200 mm from the opening around the damper must be of the same composition and made in the same way as the flexible (drywall) wall.

Remarks

***a)** – concrete / masonry / aerated concrete wall (rigid).*

***b)** – floor / ceiling made of concrete / aerated concrete (rigid).*

***c)** – flexible (drywall) wall.*

***v_e** – vertical wall.*

***h_o** – horizontal floor / ceiling.*

- **DRY MOUNTING**

Mounting in mineral wool with fire-resistant pads.

1. The opening of the support structure must be prepared as illustrated by the figure. The gap surfaces must be smooth and clean.

The opening in the flexible wall must be enhanced according to the relevant standards. The dimensions of the opening are determined based on the nominal dimensions of the damper, accounting for the additional gap. The opening for rectangular dampers will have the dimensions W+120 and H+120.

2. The fire damper (1) should be installed with mounting brackets (2) onto the supporting structure (under the pads KNP-P) using appropriate screws or screws and dowels (F1).

Insert the damper in the mechanism side and secure it on the wall with mounting brackets (2) and appropriate screws (F1).

3. Thoroughly fill up the space between the wall and the fire damper with mineral wool (M2) of a density at least 50 kg/m³. During the procedure, do not deform the fire damper casing and avoid soiling the functional parts of the damper, which could impair its proper functioning.
4. Cover the gap between the fire damper and the mounting opening with a KNP-P (A1) kit using screws (F1) through the pre-made holes.
5. All gaps between pads, pads and the wall, and pads and the fire damper should be filled up with a fire-resistant coating (M3).
6. Open and clean the damper after installing it if necessary.
7. Ensure the fire damper functions as intended.

Standard mounting distances

The minimum distance from the wall or the ceiling to the fire damper is 150 mm for dry installation.

For multiple passages through a fire-resistant wall, the minimum distance between two damper casings is 300 mm.

The distance between the fire damper and an adjacent foreign object crossing the fire-resistant wall is 200 mm.

Mounting in a wall thinner than the tested one

It is possible to mount it into a thinner wall, as long as an additional layer(-s) of fire-resistant plates is attached to the wall surface to achieve the same sealing length as the value used when testing.

The minimum width of the additional plates around the damper is 200 mm.

Besides, the alternative (thinner) wall must be categorized in accordance with EN 13501-2:2016 by fire resistance. The value must be sufficient to justify the use of the product.

In case of a protruding wall, the extra layers must be secured on the steel structure of the wall.

2 Dry	BSK1, 100x100… …1000x1000	EI 60 (ve ho i↔o) S	a)	b)	c)	* ≤ 800×800

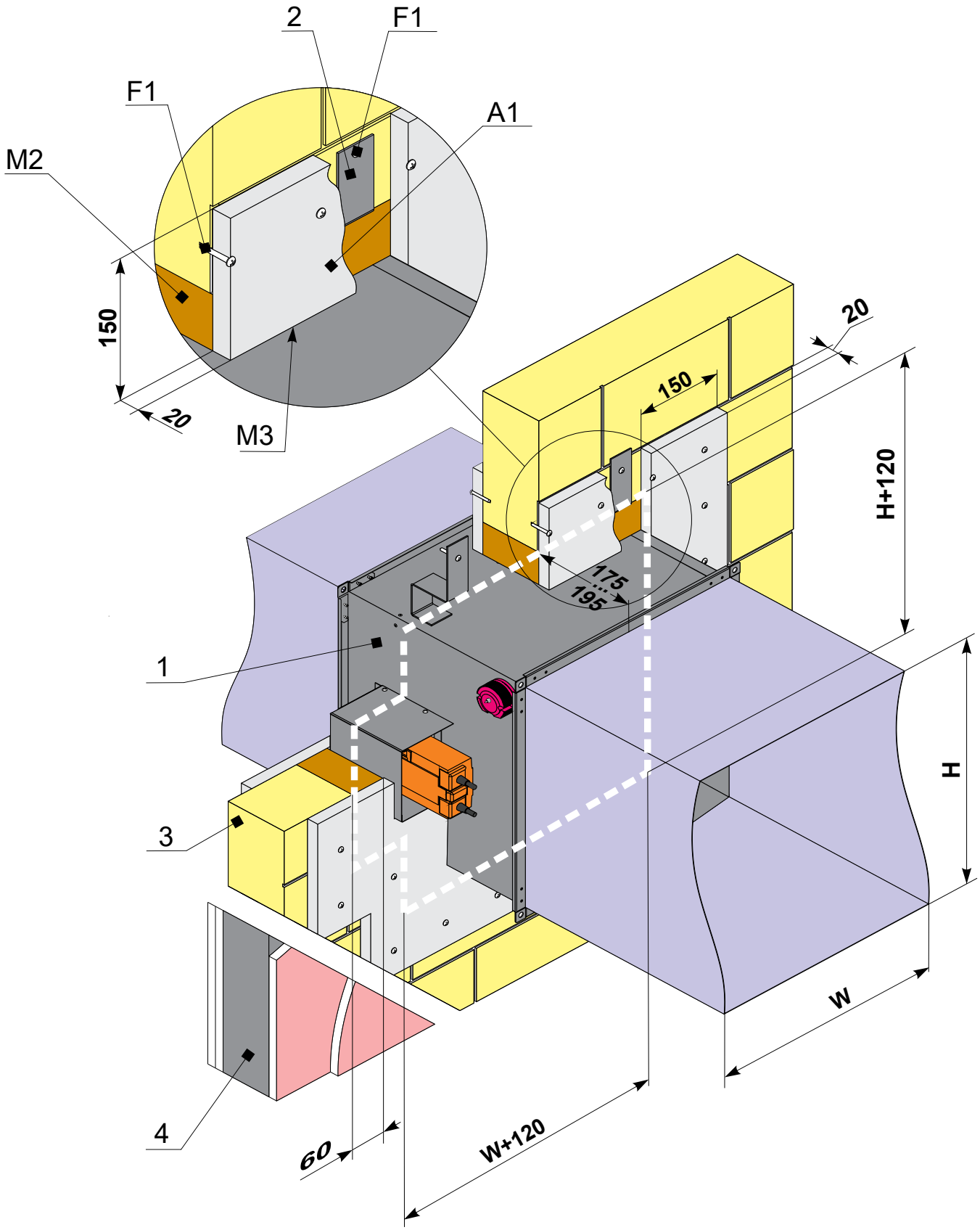

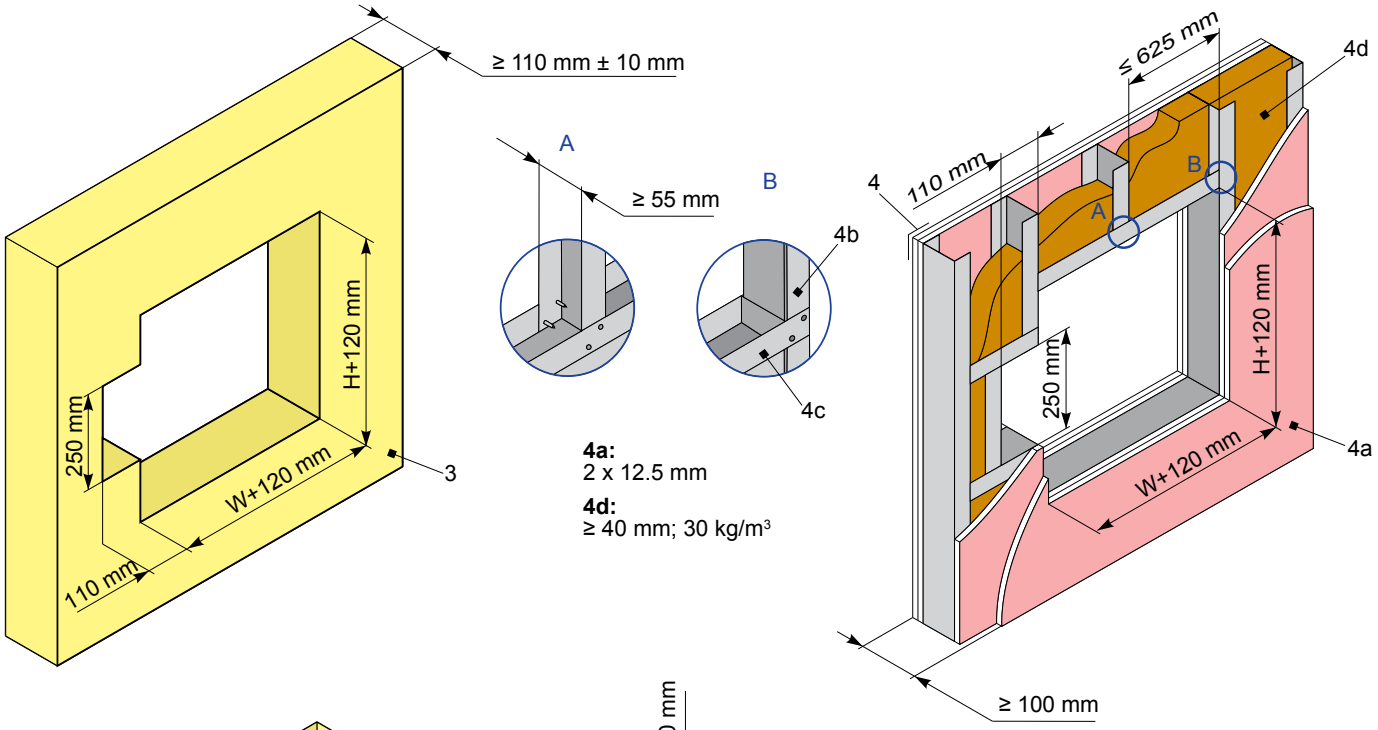
≥ 110 mm ± 10 mm
H+120 mm
250 mm
W+120 mm
110 mm
3
A
≥ 55 mm
B
4b
4c
4a:
2 x 12.5 mm
4d:
≥ 40 mm; 30 kg/m³
≤ 625 mm
4d
4
110 mm
A
B
H+120 mm
250 mm
4a
W+120 mm
≥ 100 mm

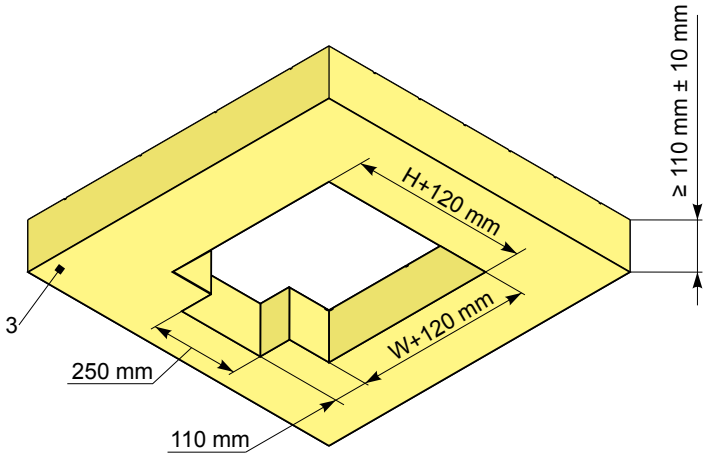
≥ 110 mm ± 10 mm
H+120 mm
3
W+120 mm
250 mm
110 mm

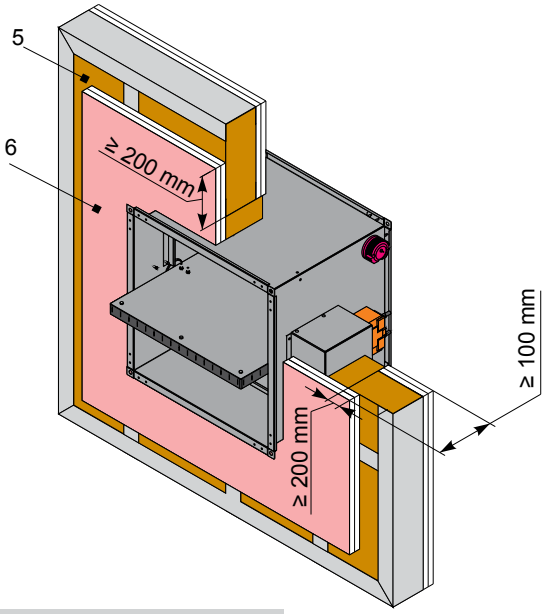
5
6
≥ 200 mm
≥ 100 mm
≥ 200 mm

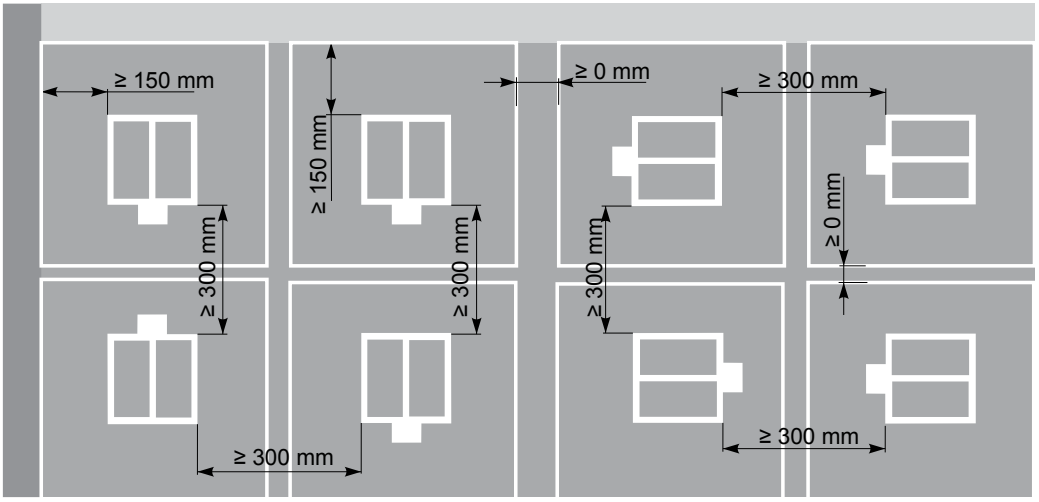
≥ 150 mm
≥ 150 mm
≥ 0 mm
≥ 300 mm
≥ 300 mm
≥ 300 mm
≥ 0 mm
≥ 300 mm
≥ 300 mm

Specification

F1 Screw ≥ 5.5 DIN7981 or the corresponding dowel with a screw of size 6

M2 Mineral wool filling (≥150 kg/m³)

M3 Fire-resistant coating, e.g. Promastop-CC / Promat

A1 Pad (accessory) required

1 Fire damper

2 Mounting bracket (not included in the delivery set)

3 Wall or ceiling made of concrete / masonry / cellular concrete

4 Flexible (drywall) wall

4a Two layers of drywall F-type, EN 520 fire-resistant plate.

4b Vertical CW studs

4c Horizontal CW studs

4d Mineral wool; for thickness / density see the figure

5 Alternative (thinner) wall (whose fire resistance is categorized in accordance with EN13501-2:2007 + A1: 2009 sufficient to justify the use of the product)

6 The area up to a distance of 200 mm from the opening around the damper must be of the same composition and made in the same way as the flexible (drywall) wall

Remarks
a) *– concrete / masonry / aerated concrete wall (rigid)*
b) *– floor / ceiling made of concrete / aerated concrete (rigid)*
c) *– flexible (drywall) wall*
v_e – vertical wall.
h_o – horizontal floor / ceiling.

- **SURFACE MOUNTING**

Wall surface mounting / at a distance from the wall using Promatect plates

ADVICE: The filling to be applied to the gap between the air duct and the slit (M2) and its coating (M3) can also be substituted for plaster / mortar / concrete (M1).

Fire damper set-up before installing: Attach all 4 parts of the accessory MKNSP (A2) around the casing where the damper blade is located, as shown in the figure. Apply the appropriate fire-resistant coating (M3) to the adjacent surfaces of the plates and the damper. Fasten them using screws, which are included in the MKNSP delivery set.

1. The opening of the support structure must be prepared as illustrated by the figure. The gap surfaces must be smooth and clean.

The opening in the flexible wall must be enhanced according to the relevant standards. The dimensions of the opening are determined based on the nominal dimensions of the damper, accounting for the additional gap. The opening for rectangular dampers will have the dimensions W+120 and H+120.

2. Insert the air duct into the supporting structure along with the damper so that the air duct protrudes from the wall by the required distance. Push the insulation (M2) into the cavity around the air duct and trim its edges flush with the wall surface.
3. Apply a layer of the corresponding coating (M3) onto the insulation and wall surfaces at a distance of ca. 100 mm from the air duct to cover the insulation and part of the wall. You may also use the filling (M1) respectively during wet installation.
4. Place four 100 mm wide boards (M5) around the air duct and fasten them with corresponding screws (F1) to the wall. Attach the L-stud (M4) to the wall and air duct on the fire damper side. Secure the 4 boards (M5) by connecting these with screws in the corners.
5. Lay mineral wool (37) along the perimeter of the air duct in between the boards (35) and the accessory MKNSP (A2). Cover the MKNSP (A2) accessory and the boards (35) along their entire length with 20 mm thick boards (36). Apply fire-resistant coating (M3) to all joints and secure the boards with screws (33).
6. Fix the damper where the blade is located using a stud (34) at the top and bottom of the damper by using threaded rods (20) and nuts.

Threaded rods must be ≤75 mm away from the insulated side surface.

7. Open and clean the damper after installing it if necessary.
8. Ensure that the screws do not obstruct the blade's motion and ensure that the fire damper functions as intended.

Air duct mounting options

The placement of hangers and the suspension of the air duct depends on the distance between the damper and the supporting structure.

Depending on the desired distance between the wall and the point where the air duct is connected to the fire damper, two fastening methods are used:

- for distances ≤1500 mm;
- for distances >1500 mm.

Standard mounting distances

The minimum installation distance from the wall or the ceiling to the fire damper is 160 mm.

For multiple passages through a fire-resistant wall, the minimum distance between two damper casings 200 mm. The distance between the fire damper and an adjacent foreign object crossing the fire-resistant wall is 200 mm.

3 Surface	BSK1 100x100… …1000x1000	EI 60 (ve i↔o) S	a)	b)	

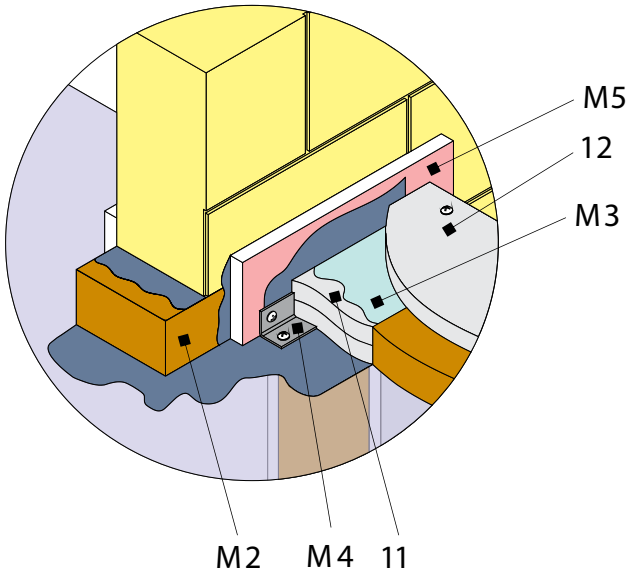

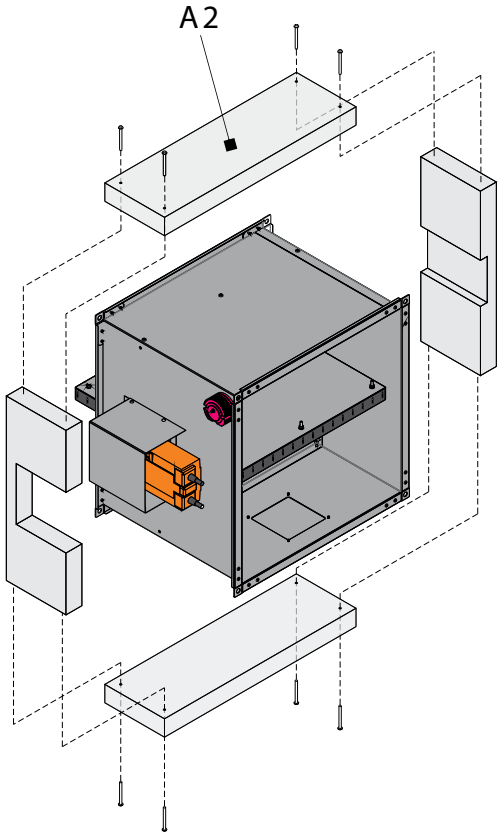

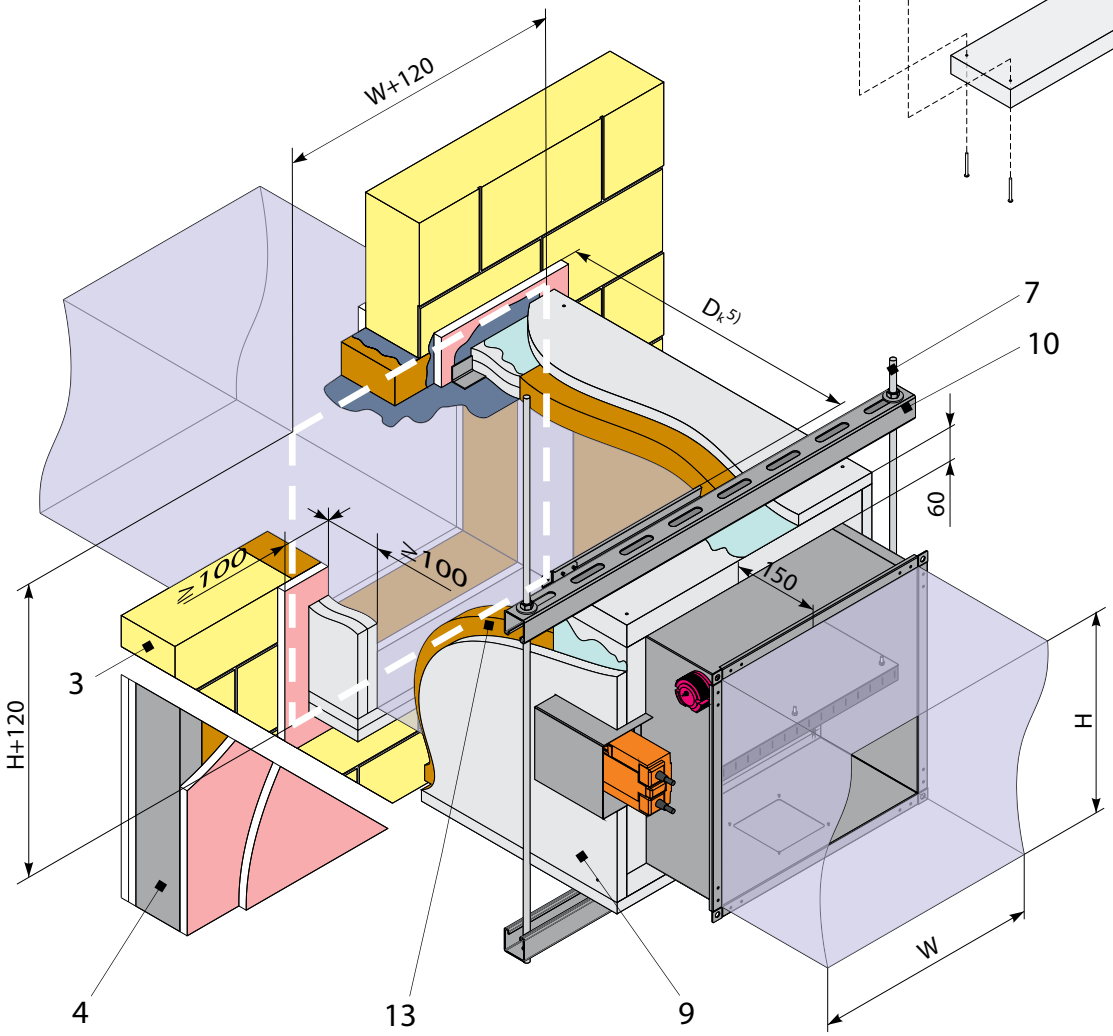

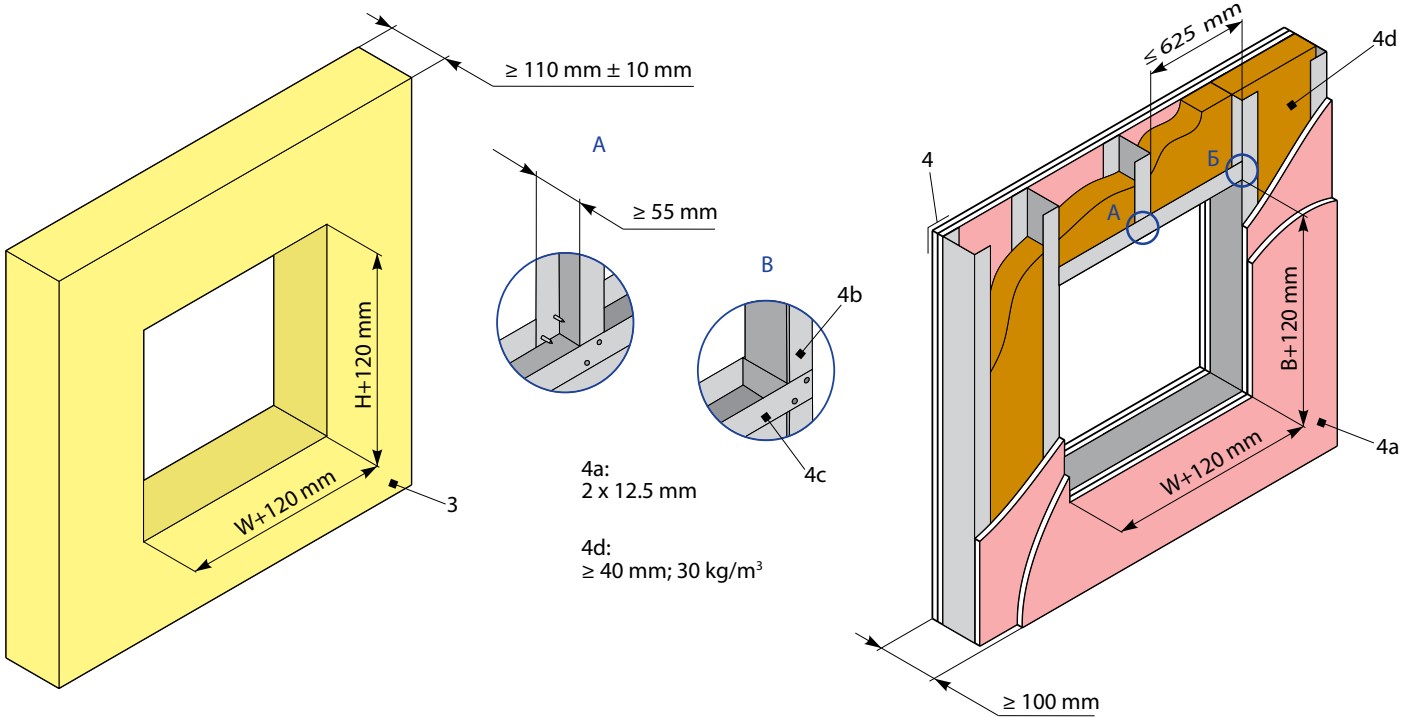
≥ 110 mm ± 10 mm
A
≥ 55 mm
B
4b
4c
H+120 mm
W+120 mm
3
4a:
2 x 12.5 mm
4d:
≥ 40 mm; 30 kg/m³
≤ 625 mm
4d
4
Б
A
B+120 mm
4a
W+120 mm
≥ 100 mm

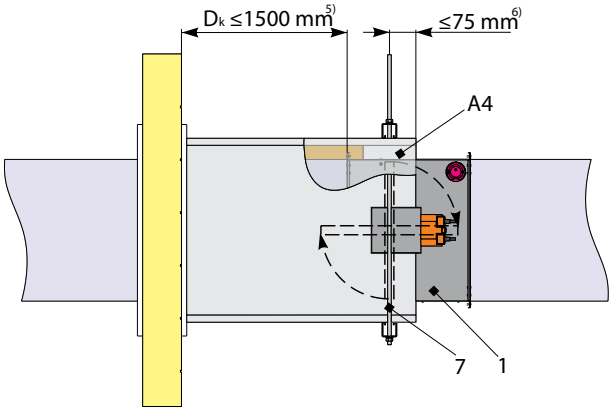
Dk ≤1500 mm5)
≤75 mm6)
A4
7
1

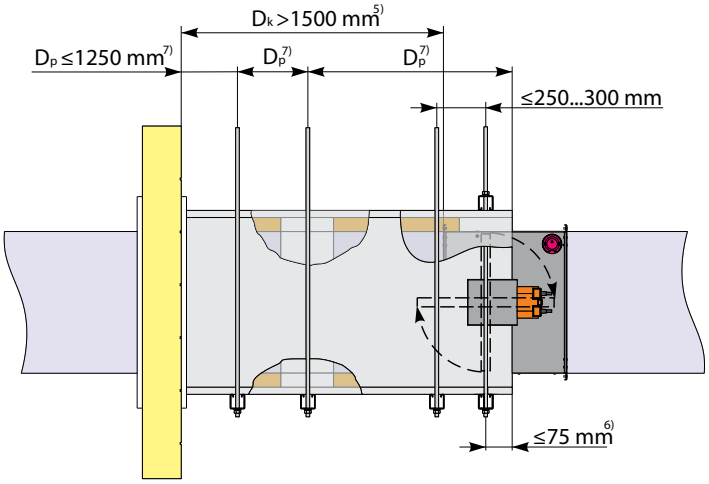
Dk >1500 mm5)
Dp ≤1250 mm7)
Dp7)
Dp7)
≤250...300 mm
≤75 mm6)

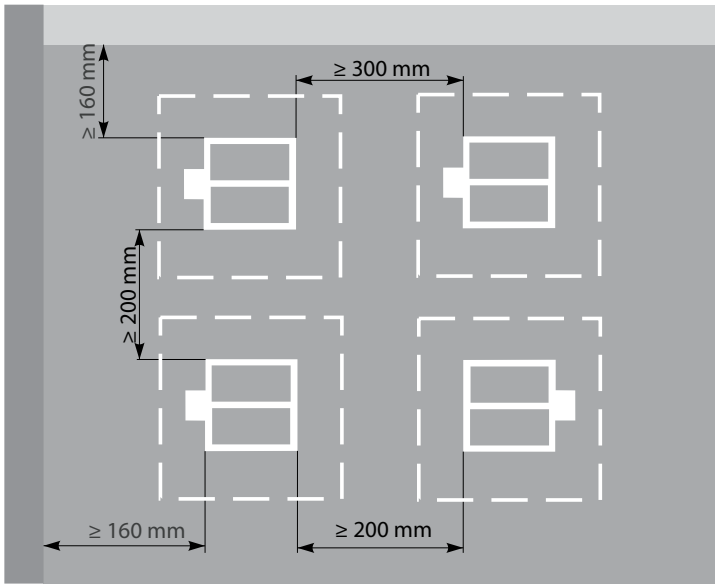
≥ 160 mm
≥ 300 mm
≥ 200 mm
≥ 160 mm
≥ 200 mm

Specification

F1 Screw ≥ 5.5 DIN7981 or the corresponding dowel and a screw of size 6
M2 Mineral wool filling 50 mm thick; ≥150 kg/m³ – in the wall
M3 Fire-resistant coating; Promat kleber K84 / Promat
M4 Steel L-stud 25×25×2 mm
M5 Drywall 15 mm thick; min. width 100 mm
A2 Mounting kit MKNSP (accessory)
1 Fire damper (actuator side)
3 Wall made of concrete / masonry / bricks / cellular concrete
4 Flexible (drywall) wall
4a 2 layers of drywall F-type, EN 520 fire-resistant plate
4b Vertical CW studs
4c Horizontal CW studs
4d Mineral wool; for thickness / density see the figure
7 Steel threaded rod M10
8 Calcium silicate plate; 40(20+20)×100 mm thick; Promatect L500 / Promat
9 Screw 5×80; DIN7997
10 U stud (MQ41/HILTI)
11 Calcium silicate plate, 20 mm thick; width ≥100 mm; 2 layers; Promatect L500 / Promat
12 Calcium silicate plate, 20 mm thick; Promatect L500 / Promat
13 Mineral wool filling 40 mm thick; ≥45 kg/m³

Remarks

***a)** – concrete / masonry / aerated concrete wall (rigid)*
***c)** – flexible (drywall) wall*
***v_e** – vertical wall*
(5 the placement of hangers for air ducts depends on the distance between dampers and the supporting structure Dk
(6 the hangers must be located at a distance of 75 mm at most from the edges of MKNSP
(7 Dp – the length of Promatect plates recommended by the manufacturer is 1250 mm; the allowed gap between the hangers is 1500 mm
M1 – Plaster / mortar / concrete filling can serve as a substitute for the filling (M2).
When using plaster / mortar / concrete filling, the (M3) coating for the mineral wool installed into the wall is not necessary.

- **INSTALLING MULTIPLE DAMPERS, EI60S**

Installing a kit of fire dampers BSK1

1. In order to install a damper, drill a square hole with dimensions H1 and W1. The drilled surfaces must be smooth and clean.
2. Determine the lowermost point where the casing crosses the air duct and insert the L studs (M6) on both sides of the wall. When fastening with the screws (F2), check the horizontal alignment. Fill up the bottom and top parts of the opening of resulting setup with mineral wool (M2). Apply a layer of the fire-resistant coating (M3) on the touching surfaces of the mineral wool before inserting.
3. Before installing the fire dampers onto the studs, make cuts in the mineral wool filling for the protruding parts of the dampers.
4. Apply fire-resistant coating (M3) to the insulation, as well as on the surfaces touching the damper. Insert the bottom fire damper BSK1 – 1A.
5. Secure the bottom of the damper to the L stud with screws (F2), keeping the maximum distance between the screws at 200 mm.
6. Glue segments of 60 mm thick mineral wool (M2) up to the side of the BSK1 – 1A damper (the in-between section the damper kit) using the fire-resistant coating (M3).

The size of the mineral wool segments must match the entire area between the BSK1 – 1A and BSK1 – 1B fire dampers, so that the entire area is covered.

Apply the fire-resistant coating onto the outer surfaces of mineral wool and the BSK1 – 1A damper.

7. Put the BSK1 – 1B damper onto the L studs and press it against the first damper so that their flanges match on both sides and secure them with matching clamps.

Secure the bottom of the damper to the L stud with screws (F2), keeping the maximum distance between the screws at 200 mm.

Secure the dampers with sheet metal belts (14) on both sides with screws (F2) along all the surface of contact of the flange.

The maximum distance between the screws is 200 mm.

8. Apply the fire-resistant coating and lay out 60 mm thick mineral wool (M2) on top of the dampers BSK1 – 1A and BSK1 – 1B to create a zone baffle between the planned second row BSK1 – 2A and BSK1 – 2B.

Use the sheet metal belt (14) to make a return unit belt of length Sk on one side of the unit, and fasten it with screws (F2).

If you need higher fire resistance of the BSK1 – 2A, secure it on the side of the wall temporarily until it can be reliably mounted into the wall using an L stud (M6).

9. Install the BSK1 – 2B fire damper using the same method with which BSK1 – 2A was installed.
10. Any empty space left between the dampers and the wall must be filled with mineral wool and fire-resistant coating.
11. Secure the top dampers using an L stud (M6) on the wall using screws (F1). Use screws (F2) with a maximum distance of 200 mm between each to secure the stud with the damper.
12. Plates (M7) must be welded to all L studs. If the nominal dimension Sk = 1200 mm, one bracket is positioned in the middle. If the dimension Sk > 1200 mm, two brackets are located respectively at 1/3 and 2/3 of the L stud length. Attach them to the wall using screws (F1).
13. Ensure that all the adjacent flanges are covered with sheet metal belts (14) and fastened with screws (F2). The maximum distance between the screws is 200 mm.
14. Apply the fire-resistant coating (M3) to the seal and damper casing around the gap in between the dampers. The minimum layer thickness is 2 mm. The width of the covered section is to be at least 100 mm.
15. Remove leftovers of the coating before it dries up.
16. Remove and clean the damper after installing it (if necessary) and install the previously removed mechanisms.
17. Ensure that the screws do not obstruct the blade's motion.
18. Ensure the fire damper functions as intended.

4 Cassette	BSK1 100x100… …1000x1000	EI 60 (ve i↔o) S	a) 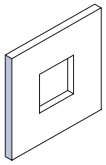	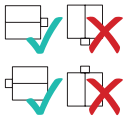

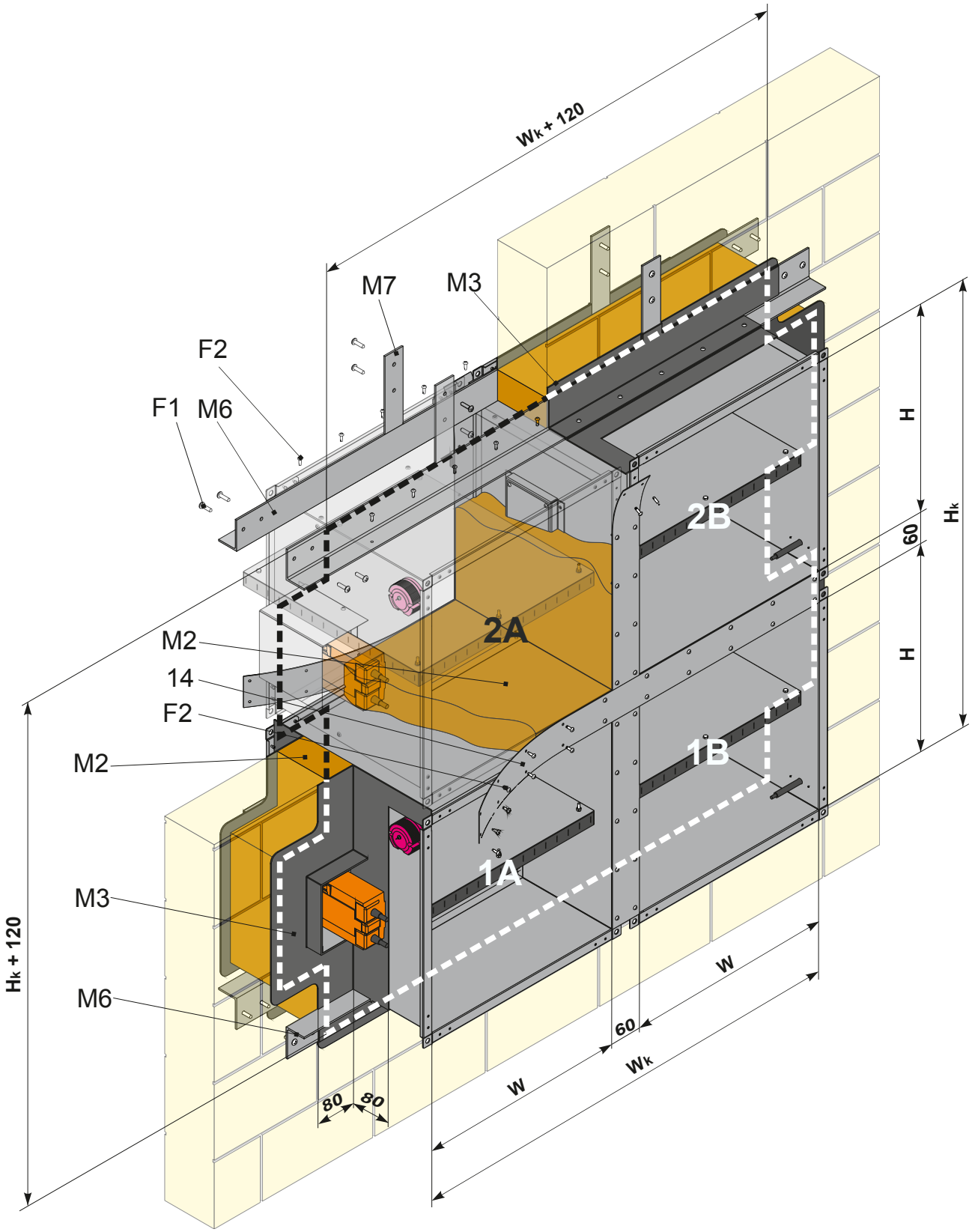

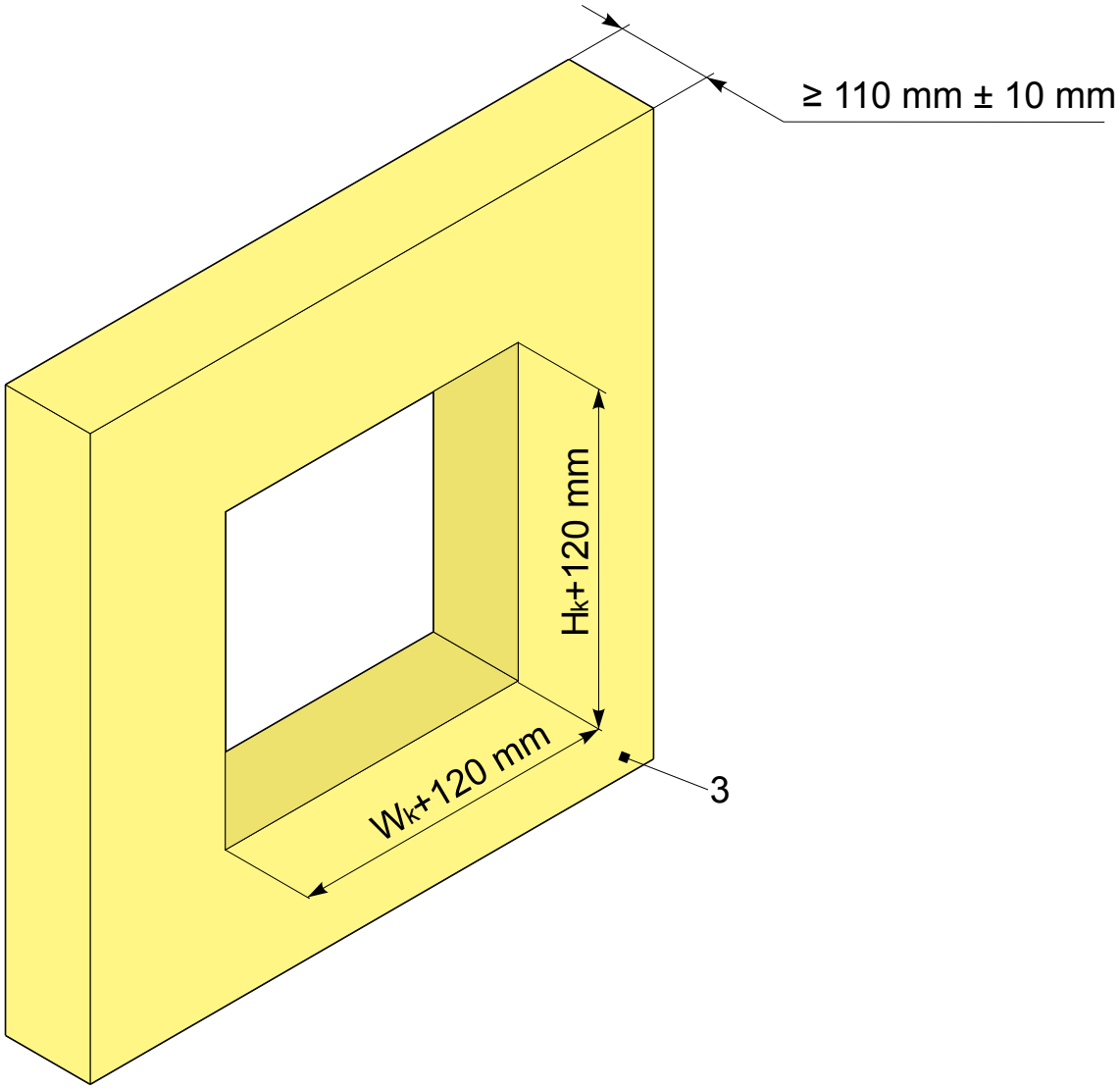

SPECIFICATION

F1 Screw ≥ 5.5 DIN7981 or the corresponding dowel and a screw of size 6

F2 Screw 3.9 × max. 13 DIN7504

M2 Mineral wool filling (min. 150 kg/m³)

M3 Fire-resistant coating, e.g. Promastop-CC / Promat

M6 Steel L-stud 60×40×3 mm, width W + 300 mm or W + 300 mm

M7 Plate 150×40×3 mm with two 6 mm holes

1 Fire damper (actuator side)

3 Wall or on ceiling made of concrete / masonry / bricks / cellular concrete

14 Metal strip 60×1.0 mm

Remarks

***a)** – concrete / masonry / cellular concrete wall (rigid)*

***ve** – vertical wall*

M1 – Plaster / mortar / concrete filling can serve as a substitute for the filling (M2). When using plaster / mortar / concrete filling, the (M3) coating for the mineral wool installed into the wall is not necessary.

- **WET INSTALLATION OF FIRE DAMPERS BSK**

Using plaster / mortar / concrete filling

1. The opening of the support structure must be prepared as illustrated by the figure. The gap surfaces must be smooth and clean. The opening in the flexible wall must be enhanced according to the relevant standards. The dimensions of the opening are determined based on the nominal dimensions of the damper, accounting for the additional gap. Drill a hole of diameter Dm for round dampers.
2. Insert the closed damper inside the opening so that the blade of the damper is in the wall. Use the mounting bracket 2 (or hangers) to secure the damper on the wall using an appropriate screw (F1; the recommended screw diameter is 5.5; e.g. DIN7981). Attach the mounting bracket to the fire damper with screws F2.
3. Fill up the space between the wall and the fire damper with plaster, mortar or concrete (M1). Make sure to avoid soiling the functional parts of the damper (1), which could impair its proper functioning. The best option is to cover the functional parts entirely while mounting.

First, let the plaster / mortar / concrete solidify, then take the following steps:

4. After the filling (M1) has solidified, remove the air duct support from the inner side of the fire damper.
5. Open and clean the damper after installing it if necessary.
6. Ensure the fire damper functions as intended.

Standard mounting distances

The minimum distance from the wall or the ceiling to the fire damper casing is 75 mm according to EN 1366-2. For multiple passages through a fire-resistant wall, the minimum distance between two damper casings is 200 mm. This also concerns the distances between the fire damper and an adjacent foreign object crossing the fire-resistant wall.

Mounting in a wall thinner than the tested one

It is possible to mount it into a thinner wall, as long as an additional layer(-s) of fire-resistant plates is attached to the wall surface to achieve the same mounting depth as the value used when testing. The minimum width of the additional plates around the damper is 200 mm. Besides, the alternative (thinner) wall must be categorized in accordance with EN 13501-2:2016 by fire resistance. The value must be sufficient to justify the use of the product. In case of a flexible wall, the extra layers must be secured on the steel structure of the wall.

	BSK EI60, BSK EI120 Ø100…Ø400	EI60 (ve ho i↔o) S	a) 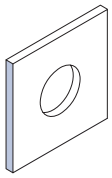	b) 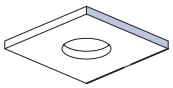	c) 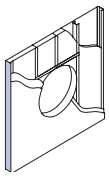	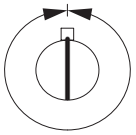
		EI120 (ve ho i↔o) S				

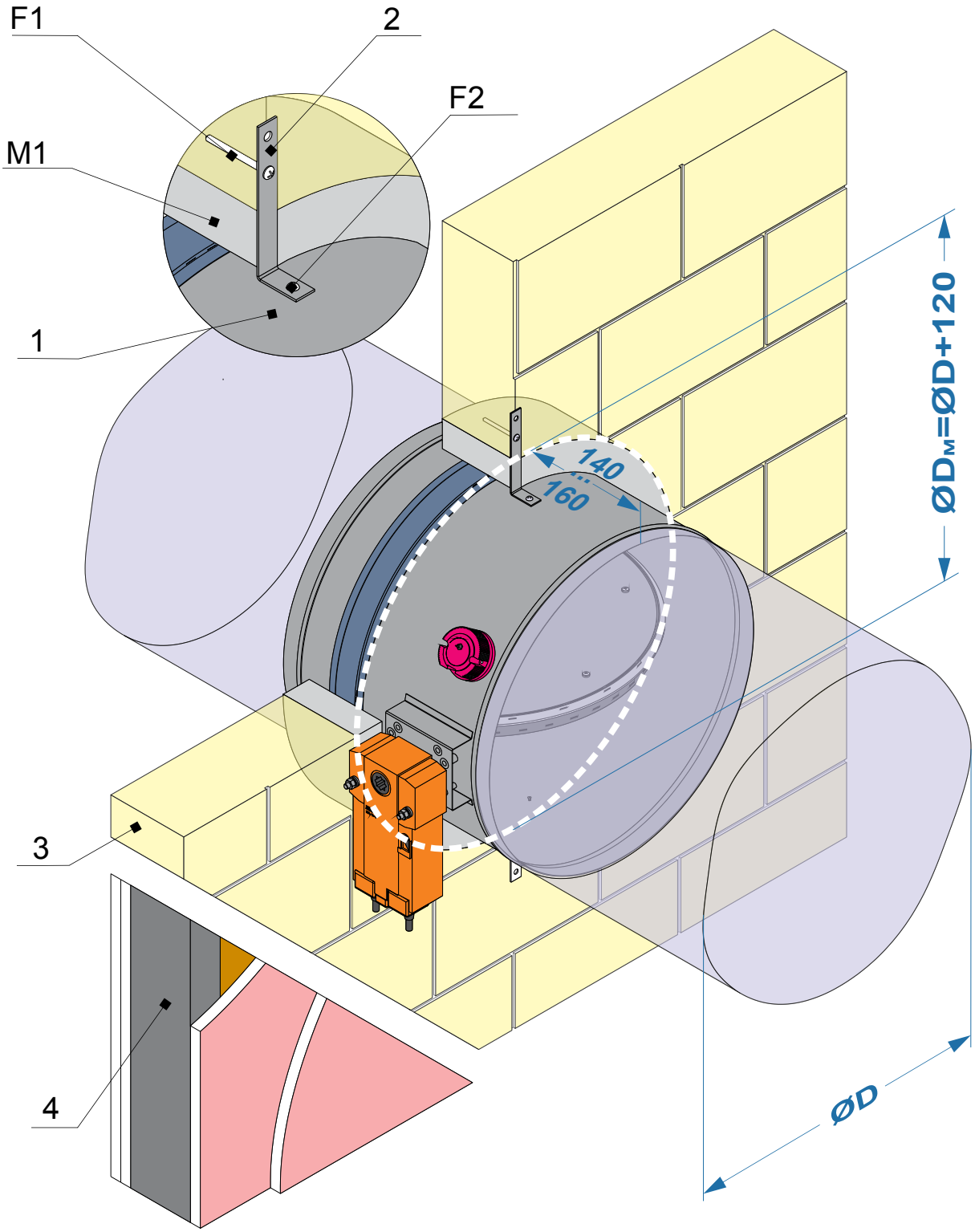

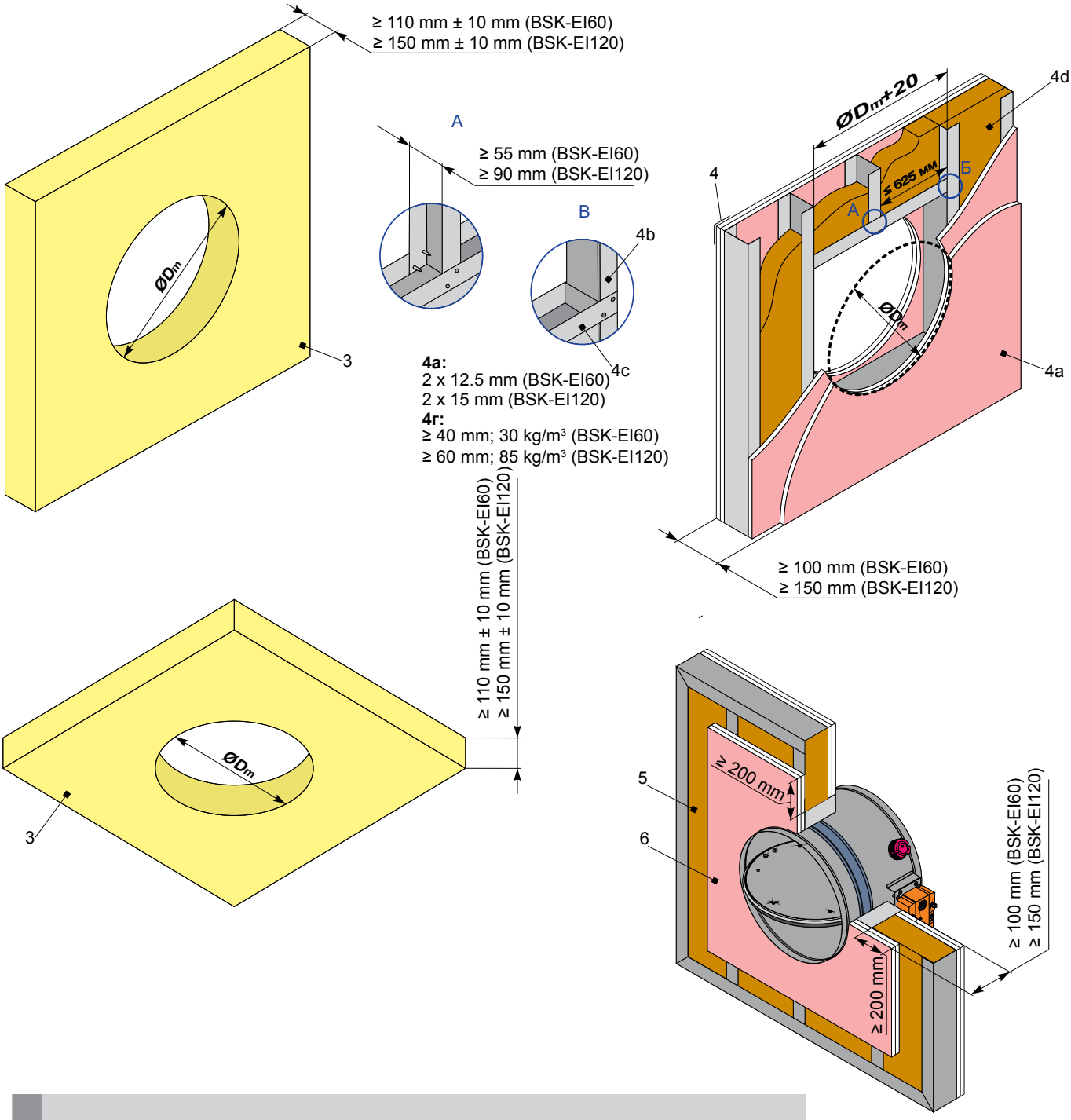
≥ 110 mm ± 10 mm (BSK-EI60)
≥ 150 mm ± 10 mm (BSK-EI120)
ØDm
3
A
≥ 55 mm (BSK-EI60)
≥ 90 mm (BSK-EI120)
B
4b
4c
4a:
2 x 12.5 mm (BSK-EI60)
2 x 15 mm (BSK-EI120)
4r:
≥ 40 mm; 30 kg/m³ (BSK-EI60)
≥ 60 mm; 85 kg/m³ (BSK-EI120)
ØDm+20
4d
4
≤ 625 мм
Б
A
ØDm
4a
≥ 100 mm (BSK-EI60)
≥ 150 mm (BSK-EI120)
≥ 110 mm ± 10 mm (BSK-EI60)
≥ 150 mm ± 10 mm (BSK-EI120)
ØDm
3
5
6
≥ 200 mm
≥ 200 mm
≥ 100 mm (BSK-EI60)
≥ 150 mm (BSK-EI120)

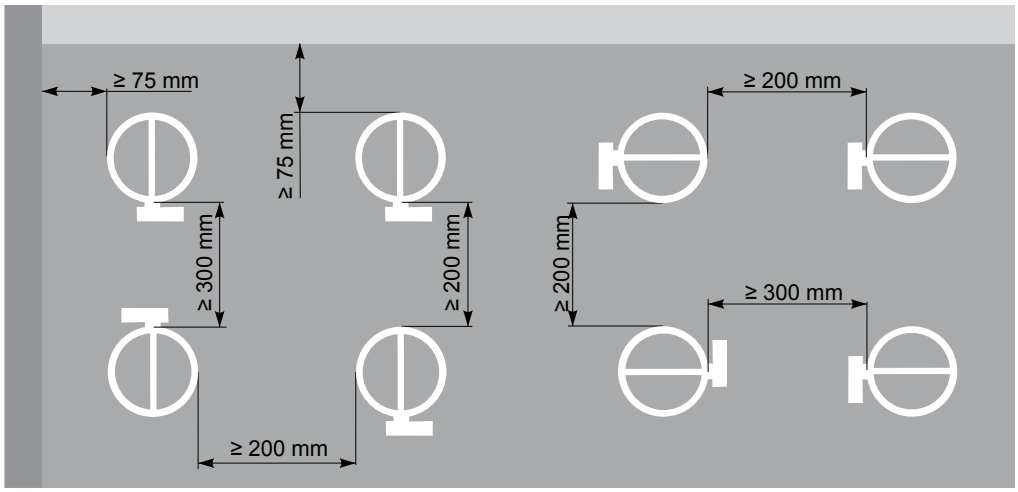
≥ 75 mm
≥ 75 mm
≥ 300 mm
≥ 200 mm
≥ 200 mm
≥ 200 mm
≥ 300 mm
≥ 200 mm

Specification

F1 Screw ≥ 5.5 DIN7981 or the corresponding dowel and a screw of size 6

F2 Screw 3.9 × max. 13 DIN7504

M1 Plaster / mortar / concrete

1 Fire damper (actuator side)

2 Mounting bracket (not included in the delivery set)

3 Wall or ceiling made of concrete / masonry / aerated concrete

4 Flexible (drywall) wall

4a 2 layers of drywall F-type, EN 520 fire-resistant plate

4b Vertical CW studs

4c Horizontal CW studs

4d Mineral wool; for thickness / density see the figure.

5 Alternative (thinner) wall (whose fire resistance is categorized in accordance with EN 13501-2:2007 + A1:2009 sufficient to justify the use of the product)

6 The area up to a distance of 200 mm from the opening around the damper must be of the same composition and made in the same way as the flexible (drywall) wall

Remarks

***a)** – concrete / masonry / aerated concrete wall (rigid)*

***b)** – floor / ceiling made of concrete / aerated concrete (rigid)*

***c)** – flexible (drywall) wall*
***v_e** – vertical wall.*
***h_o** – horizontal floor / ceiling.*

- **DRY INSTALLATION OF FIRE DAMPERS BSK, EI60S**

Using mineral wool and facing panels

1. The opening of the support structure must be prepared as illustrated by the figure. The gap surfaces must be smooth and clean. The opening in the flexible wall must be enhanced according to the relevant standards. The dimensions of the opening are determined based on the nominal dimensions of the damper, accounting for the additional gap. Drill a hole of diameter Dm for round dampers.
2. The fire dampers should be installed with mounting brackets (2) onto the pads (A1) using appropriate screws or screws and dowels (F1). Attach the mounting bracket to the damper with screws F2 (ensure that the screws do not obstruct the blade's motion). First, install the bottom part / parts of the covers. Insert the damper in the mechanism side and secure it with mounting brackets on the pad with the corresponding screws (F1). Install the other covers on the side of the mechanism afterward.
3. Thoroughly fill up the space between the wall and the fire damper with mineral wool (M2) of a density at least 50 kg/m³. During the procedure, do not deform the fire damper casing and avoid soiling the functional parts of the damper, which could impair its proper functioning.
4. Cover the gap between the fire damper and mounting hole with covers using screws (F1) through the pre-drilled holes.
5. All gaps between the panels, panels and the wall, and panels and the fire damper should be filled up with a fire-resistant coating (M3).
6. Open and clean the damper after installing it if necessary.
7. Ensure the fire damper functions as intended.

Standard mounting distances

The minimum distance from the wall or the ceiling to the fire damper is 100 mm for dry mounting. For multiple passages through a fire-resistant wall, the minimum distance between two damper casings is 200 mm. This also concerns the distances between the fire damper and an adjacent foreign object crossing the fire-resistant wall.

Mounting in a wall thinner than the tested one

It is possible to mount it into a thinner wall, as long as an additional layer(-s) of fire-resistant plates is attached to the wall surface to achieve the same mounting depth as the value used when testing. The minimum width of the additional plates around the damper is 200 mm. Besides, the alternative (thinner) wall must be categorized in accordance with EN 13501-2:2016 by fire resistance. The value must be sufficient to justify the use of the product. In case of a flexible wall, the extra layers must be secured on the steel structure of the wall.

			a)	b)	c)	
6 Dry	BSK EI60 Ø100…Ø400	EI 60 (ve ho i↔o) S				360°

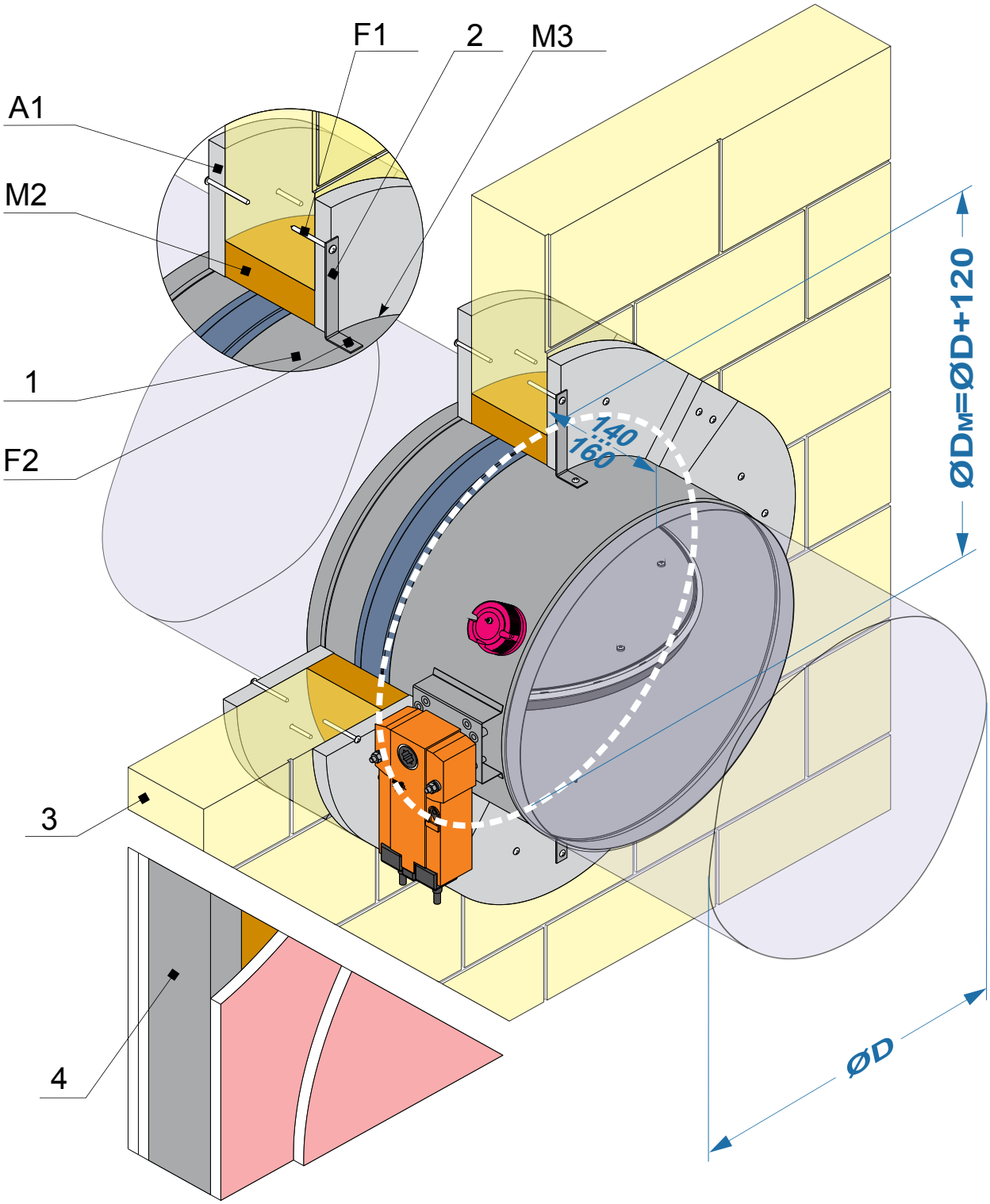

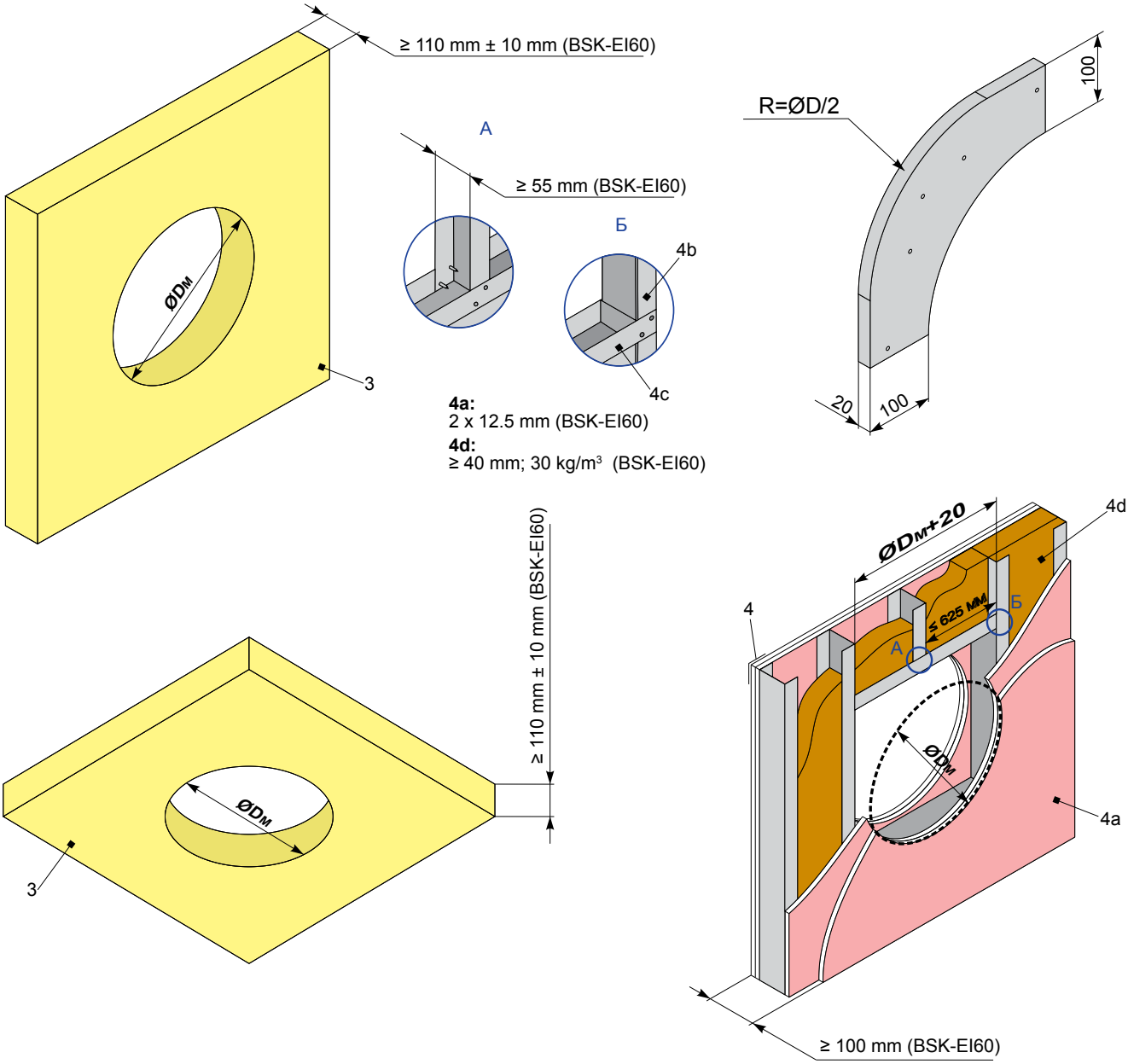
≥ 110 mm ± 10 mm (BSK-EI60)
ØDм
3
А
≥ 55 mm (BSK-EI60)
Б
4b
4c
4a:
2 x 12.5 mm (BSK-EI60)
4d:
≥ 40 mm; 30 kg/m³ (BSK-EI60)
R=ØD/2
100
20
100
≥ 110 mm ± 10 mm (BSK-EI60)
ØDм
3
ØDм+20
4d
4
≤ 625 мм
Б
А
ØDм
4a
≥ 100 mm (BSK-EI60)

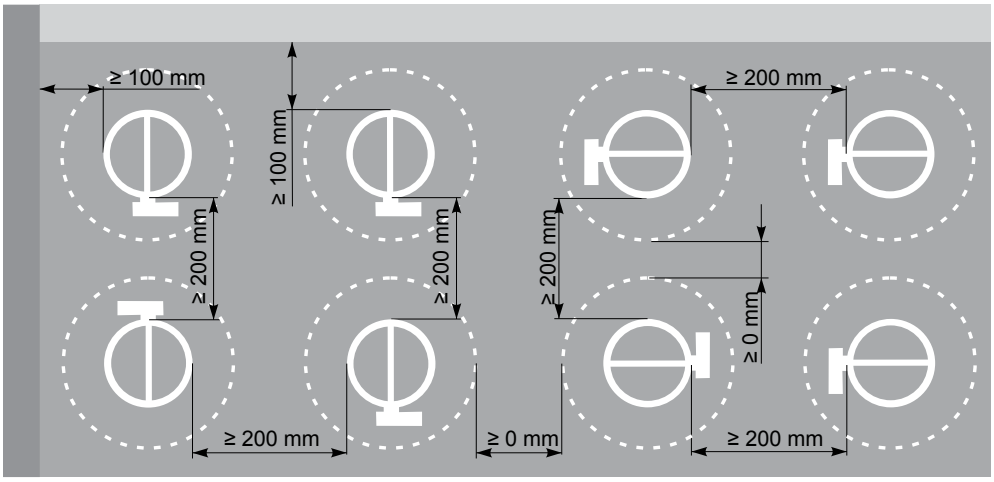
≥ 100 mm
≥ 100 mm
≥ 200 mm
≥ 200 mm
≥ 200 mm
≥ 200 mm
≥ 0 mm
≥ 0 mm
≥ 200 mm
≥ 200 mm

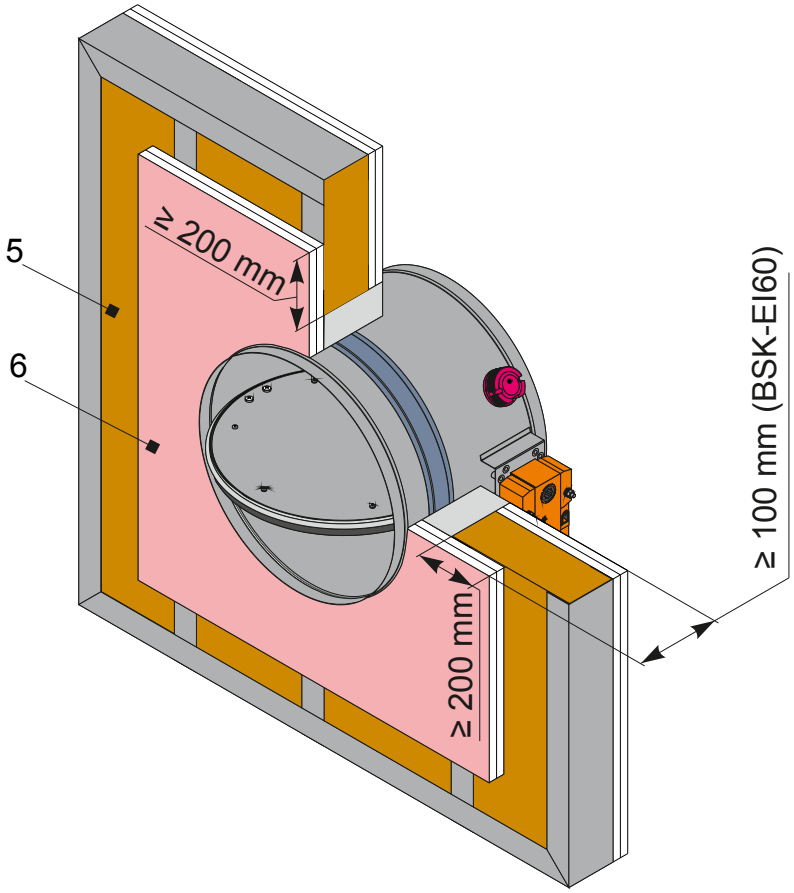

Specification

F1 Screw ≥ 5.5 DIN7981 or the corresponding dowel and a screw of size 6

F2 Screw 3.9 × max. 9.5 DIN7504

M2 Mineral wool filling (min. 150 kg/m³)

M3 Fire-resistant coating, e.g. Promastop-CC / Promat

A1 Cover (accessory) required

1 Fire damper (actuator side)

2 Mounting bracket (not included in the delivery set)

3 Wall or ceiling made of concrete / masonry / cellular concrete

4 Flexible (drywall) wall

4a 2 layers of drywall F-type, EN 520 fire-resistant plate

4b Vertical CW studs

4c Horizontal CW studs

4d Mineral wool; for thickness / density see the figure.

5 Alternative (thinner) wall (whose fire resistance is categorized in accordance with EN 13501-2:2007 + A1:2009 sufficient to justify the use of the product)

6 The area up to a distance of 200 mm from the opening around the damper must be of the same composition and made in the same way as the flexible (drywall) wall

Remarks

***a)** – concrete / masonry / aerated concrete wall (rigid)*

***b)** – floor / ceiling made of concrete / aerated concrete (rigid)*

***c)** – flexible (drywall) wall*

***v_e** – vertical wall.*
***h_o** – horizontal floor / ceiling.*

- **SURFACE MOUNTING OF FIRE DAMPERS BSK, EI60S**

ADVICE: The filling (M2) to be applied to the space in the air duct walls can be substituted for mortar / concrete (M1). In this case, the coating (M8) is not necessary.

Prepare the fire damper for installation. Secure ceramic tape (15) and the blade and secure the damper with an appropriate ring MR-MH (16)

1. The opening of the support structure must be prepared as illustrated by the figure. The gap surfaces must be smooth and clean. The opening in the flexible wall must be enhanced according to the relevant standards. The dimensions of the opening are determined based on the nominal dimensions of the damper, accounting for the additional gap. Drill a hole of diameter Dm for round dampers.
2. Insert the air duct into the supporting structure along with the damper so that the air duct protrudes from the wall by the required distance. Fill up cavity around the air duct with insulation (M2) and trim its edges flush with the wall surface. Apply a layer of the corresponding coating (M3) onto the insulation and wall surfaces at a distance of ca. 100 mm from the air duct to cover the insulation and part of the wall. You may also use the plaster / mortar / concrete filling (M1).
3. Secure the round air duct with the rings MR-MH (16) on both sides of the bar.
4. Hang the damper on the threaded rod M12 (7).
5. Insulate the damper and the parts of the air duct located between the fire damper and the wall. Wrap the round damper and air duct with one layer of insulation (17). Connect the insulation with the wall using the corresponding fire-resistant (M3). Secure the insulation (17) with a rope (Ø 1.6 mm) using the method applied to round air ducts, or via wire clamps (19) to connect the mesh on the top of the insulation (17). The actuator and thermal sensor must remain uninsulated with a maximum gap of 20 mm.
6. Apply aluminum foil (18) around the front and any other surfaces that are not covered with aluminum foil.
7. Open and clean the damper after installing it if necessary.
8. Ensure that the screws do not obstruct the blade's motion and check the damper's function.

Standard mounting distances

The minimum distance from the wall or the ceiling to the fire damper is 100 mm for dry mounting. For multiple passages through a fire-resistant wall, the minimum distance between two damper casings is 200 mm. This also concerns the distances between the fire damper and an adjacent foreign object crossing the fire-resistant wall.

Mounting in a wall thinner than the tested one

It is possible to mount it into a thinner wall, as long as an additional layer(-s) of fire-resistant plates is attached to the wall surface to achieve the same mounting depth as the value used when testing. The minimum width of the additional plates around the damper is 200 mm. Besides, the alternative (thinner) wall must be categorized in accordance with EN 13501-2:2016 by fire resistance. The value must be sufficient to justify the use of the product. In case of a flexible wall, the extra layers must be secured on the steel structure of the wall.

7 Surface	BSK EI60, Ø100…Ø400	EI 60 (ve i↔o) S	a)	c)	

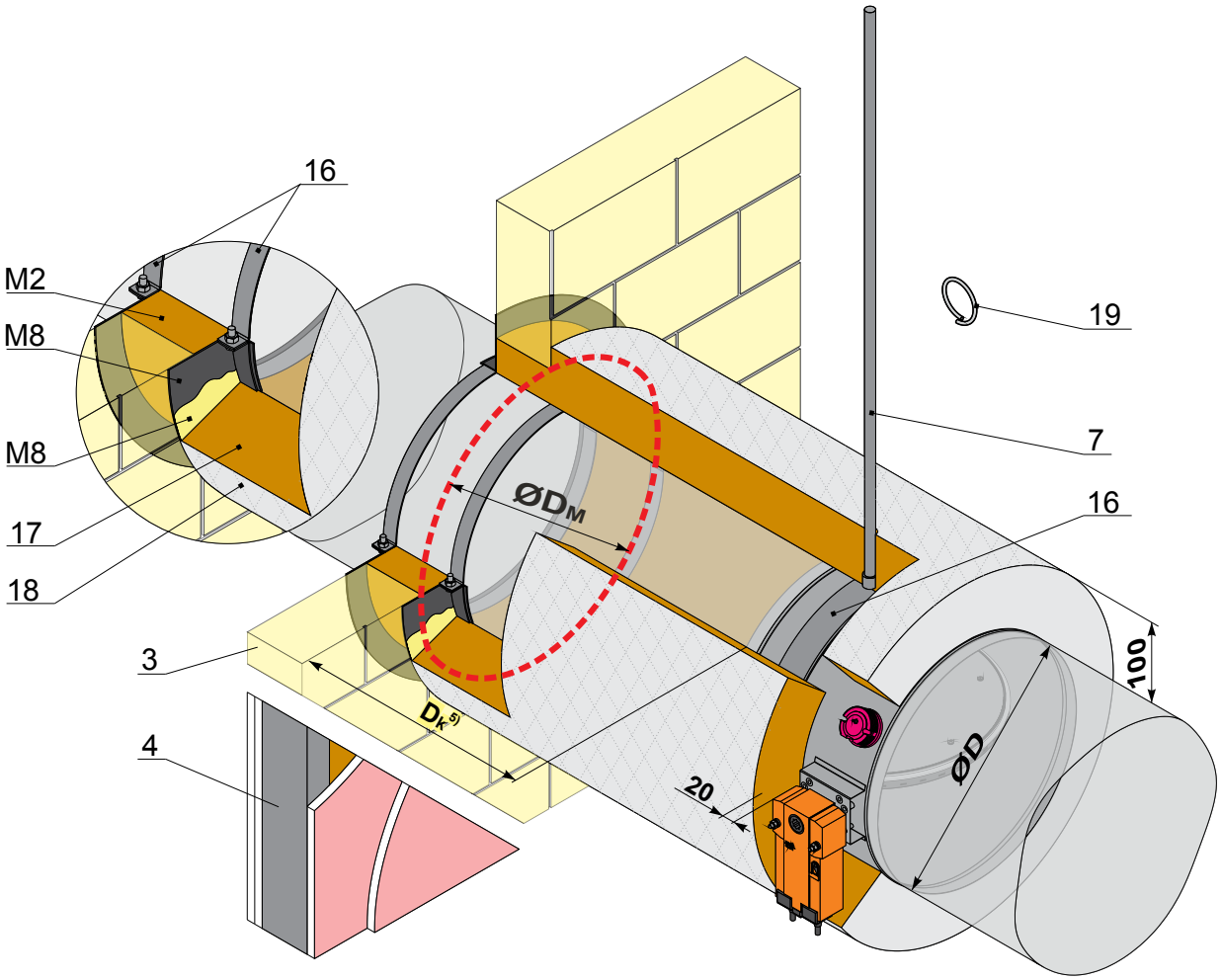

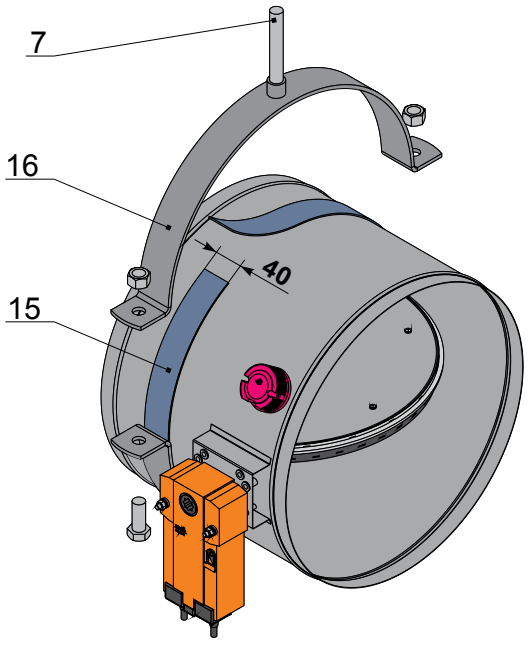

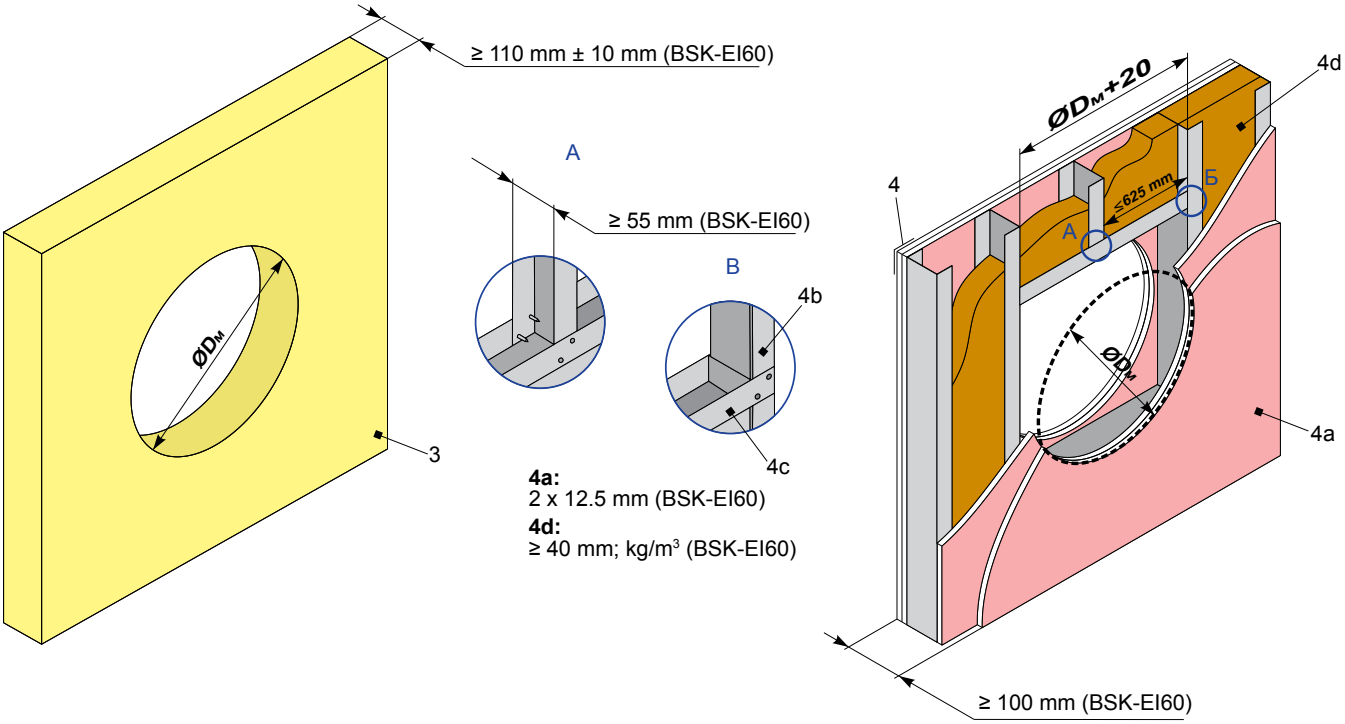
≥ 110 mm ± 10 mm (BSK-EI60)
A
≥ 55 mm (BSK-EI60)
B
4b
4c
ØDм
3
4a:
2 x 12.5 mm (BSK-EI60)
4d:
≥ 40 mm; kg/m³ (BSK-EI60)
ØDм+20
4d
4
≤625 mm
Б
A
ØDм
4a
≥ 100 mm (BSK-EI60)

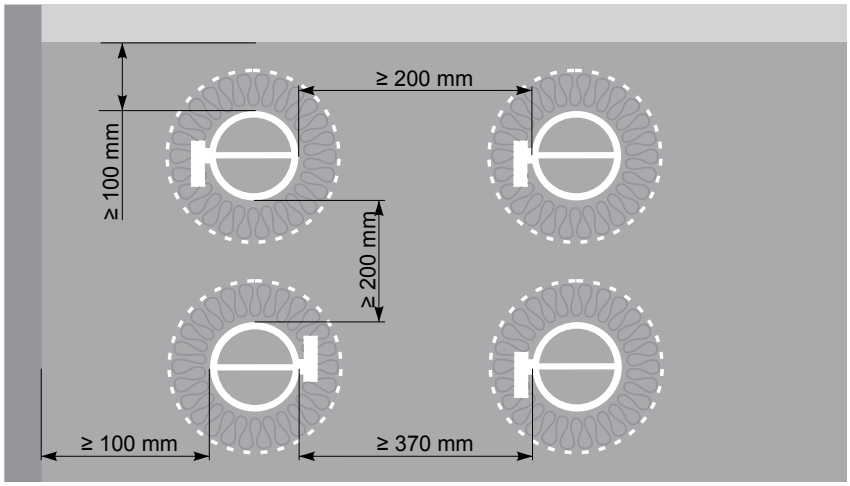
≥ 200 mm
≥ 100 mm
≥ 200 mm
≥ 100 mm
≥ 370 mm

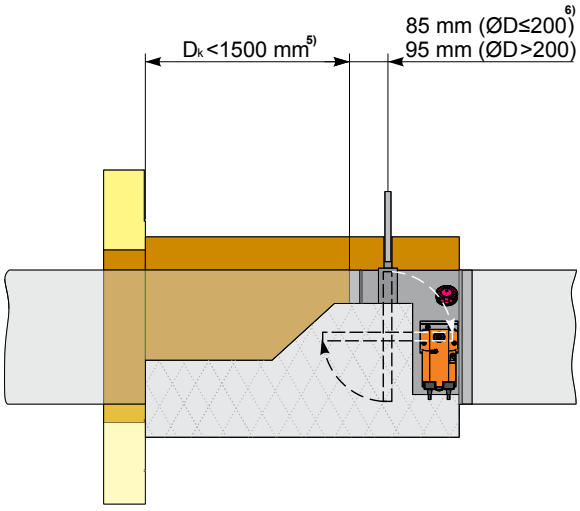
Dk <1500 mm5)
85 mm (ØD≤200)6)
95 mm (ØD>200)

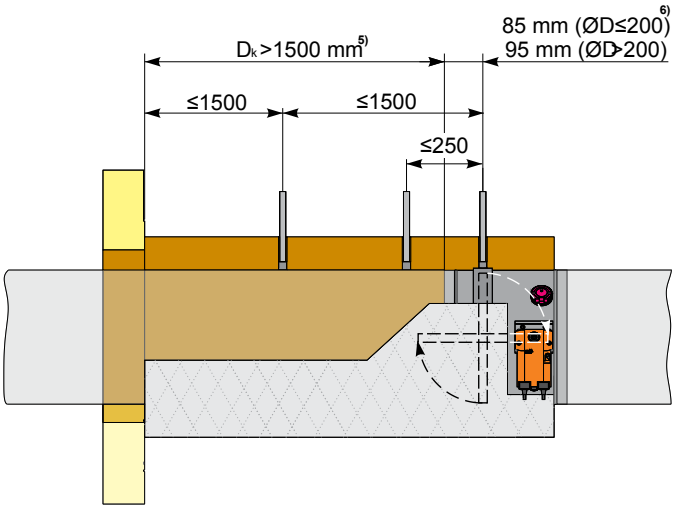
Dk >1500 mm5)
85 mm (ØD≤200)6)
95 mm (ØD>200)
≤1500
≤1500
≤250

Specification

M2 Mineral wool filling (min. 66 kg/m³) – in the wall

M8 Fire-resistant coating layer (BSF/ISOVER) at least 2 mm thick for open surfaces

1 Fire damper (actuator side)

3 Wall or on ceiling made of concrete / masonry / bricks / cellular concrete

4 Flexible (drywall) wall

4a Two layers of drywall F-type, EN 520 fire-resistant plate.

4b Vertical CW studs

4c Horizontal CW studs

4d Mineral wool; for thickness / density see the figure.

7 Steel threaded rod M12

15 Ceramic tape (LYTX-236B, Inventum), 40 mm wide, 2 mm thick

16 Ring for suspending the damper (MR-MH, HILTI) when used with threaded rod M12

17 Mineral wool ULTIMATE Protect Slab 4.0 Alu1 / ISOVER (min. 66 kg/m³)

18 Aluminum foil around the front and other surfaces that are not covered with aluminum foil

19 Wire clamp U-ProtectWiredMat

Remarks:

v_e – vertical wall.

(5 – placement of hangers and the suspension of the air duct depends on the distance Dk between the dampers and the supporting structure

(6 – distance between the blade axis and the damper's flange. The distance depends on the type of the damper used. M1 – plaster / mortar / concrete filling can serve as a substitute for the filling M2. When using plaster / mortar / concrete filling, the M8 coating is not necessary.

CONNECTION TO POWER MAINS

The actuators featuring a return spring are designed to control fire-resisting dampers and smoke-extraction dampers installed in ventilation and air-conditioning systems.
The return spring is cocked upon setting the damper flap to the horizontal position. In case of a power failure, the damper flap is re-set to the protective position by the energy stored in the spring.
The damper does not require any limit switches and is overload-proof.
The thermal breaker Tf1 is triggered upon ambient temperature exceeding 72 °C.
The renewable thermal breakers Tf2 and Tf3 actuate upon the air duct temperature exceeding 72 °C.
The operation of the renewable thermal breakers interrupts the electric power supply in such a way that it prevents actuator re-activation without their replacement.
The button on the thermal breaker body enables testing the damper functionality.
The actuator is equipped with two fixed microswitches which signal the end positions.
Intermediate positions of the damper are shown by the mechanical indicator (needle).
The BF24-T and BFN24-T actuators are connected via an insulated transformer unit .
The damper can also be controlled manually and fixed in any position. The unit can be unlocked either manually using a hex wrench (included) or automatically upon power-up.
The actuator connections (cables and wires) must be durable, insulated and heat-resistant.
The recommended minimum conductor cross-section is 0.75 mm². The conductor cross-section selection must account for the maximum permissible wire heating which depends on the wire type, its insulation, length and installation method (i.e. overhead, in cable channels or inside walls).

Electrical connection of the basic models of Belimo and Nenutec electric actuators, as well as Belimo and Nenutec models with higher torque

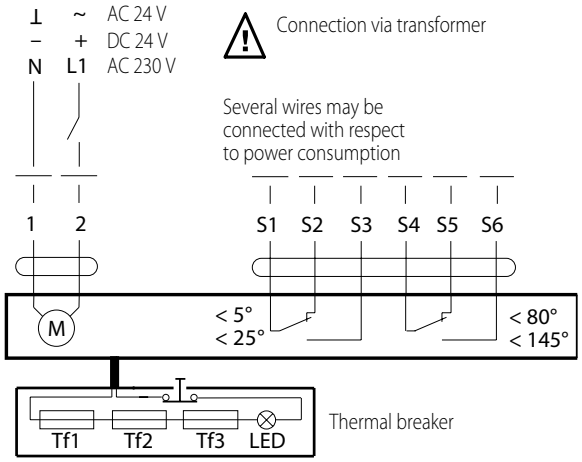

Electrical connection of Belimo electric actuators with the highest torque, as well as Siemens electric actuators

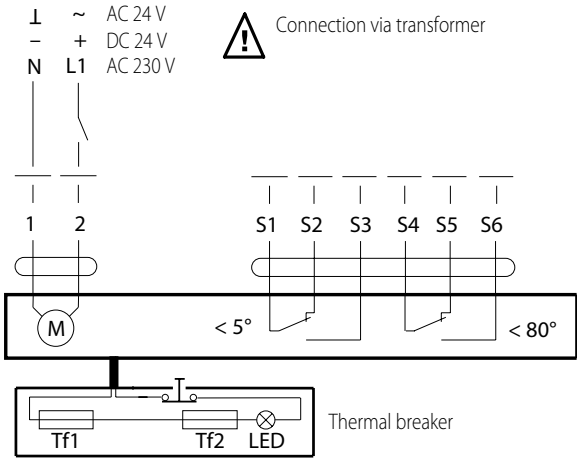

TECHNICAL MAINTENANCE

The damper technical maintenance includes routine inspections and functionality checks.
The damper technical maintenance frequency must comply with the established technical maintenance frequency of the fire safety equipment complex of the facility.

Recommended inspection steps according to EN 15650:
1. Identification of the damper.
2. Date of the inspection.
3. Check the electrical connection of the actuating mechanism (if any).
4. Check the damper for cleanliness and the need for cleaning (if necessary).
5. Check the condition of the blade and seal, perform correction and registration actions (if necessary).
6. Check that the damper is able to close properly.
7. Check the functionality of the damper: opening and closing using the control system, physical inspection of the blade behaviour, perform correction and registration actions (if necessary).
8. Check the functionality of the limit switches in the open and closed position, perform correction and registration actions (if necessary).
9. Check that the damper is operating as intended as part of the control system (if necessary).
10. Check the standard operating position of the damper.
11. The damper usually operates as a part of the system.
In this case, it is necessary to check the entire system as described in the requirements for its operation defined by the system developer.

STORAGE AND TRANSPORTATION REGULATIONS

- Store the unit in the manufacturer's original packaging box in a dry closed with temperature range from -20 °C to +50 °C.
- Storage environment must not contain aggressive vapors and chemical mixtures provoking corrosion, insulation, and sealing deformation.
- Use suitable hoist machinery for handling and storage operations to prevent possible damage to the unit.
- Follow the handling requirements applicable for the particular type of cargo.
- The unit can be carried in the original packaging by any mode of transport provided proper protection against precipitation and mechanical damage. The unit must be transported only in the working position.
- Avoid sharp blows, scratches, or rough handling during loading and unloading.
- Prior to the initial power-up after transportation at low temperatures, allow the unit to warm up at operating temperature for at least 3-4 hours.

MANUFACTURER'S WARRANTY

The product is in compliance with EU norms and standards on low voltage guidelines and electromagnetic compatibility. We hereby declare that the product complies with the provisions of Electromagnetic Compatibility (EMC) Directive 2014/30/EU of the European Parliament and of the Council, Low Voltage Directive (LVD) 2014/35/EU of the European Parliament and of the Council and CE-marking Council Directive 93/68/EEC. This certificate is issued following test carried out on samples of the product referred to above.
The manufacturer hereby warrants normal operation of the unit for 24 months after the retail sale date provided the user's observance of the transportation, storage, installation, and operation regulations. Should any malfunctions occur in the course of the unit operation through the Manufacturer's fault during the guaranteed period of operation, the user is entitled to get all the faults eliminated by the manufacturer by means of warranty repair at the factory free of charge. The warranty repair includes work specific to elimination of faults in the unit operation to ensure its intended use by the user within the guaranteed period of operation. The faults are eliminated by means of replacement or repair of the unit components or a specific part of such unit component.

The warranty repair does not include:

- routine technical maintenance
- unit installation/dismantling
- unit setup

To benefit from warranty repair, the user must provide the unit, the user's manual with the purchase date stamp, and the payment paperwork certifying the purchase. The unit model must comply with the one stated in the user's manual. Contact the Seller for warranty service.

The manufacturer's warranty does not apply to the following cases:

- User's failure to submit the unit with the entire delivery package as stated in the user's manual including submission with missing component parts previously dismounted by the user.
- Mismatch of the unit model and the brand name with the information stated on the unit packaging and in the user's manual.
- User's failure to ensure timely technical maintenance of the unit.
- External damage to the unit casing (excluding external modifications as required for installation) and internal components caused by the user.
- Redesign or engineering changes to the unit.
- Replacement and use of any assemblies, parts and components not approved by the manufacturer.
- Unit misuse.
- Violation of the unit installation regulations by the user.
- Violation of the unit control regulations by the user.
- Unit connection to power mains with a voltage different from the one stated in the user's manual.
- Unit breakdown due to voltage surges in power mains.
- Discretionary repair of the unit by the user.
- Unit repair by any persons without the manufacturer's authorization.
- Expiration of the unit warranty period.
- Violation of the unit transportation regulations by the user.
- Violation of the unit storage regulations by the user.
- Wrongful actions against the unit committed by third parties.
- Unit breakdown due to circumstances of insuperable force (flood, earthquake, war, hostilities of any kind, blockades).
- Missing seals if provided by the user's manual.
- Failure to submit the user's manual with the unit purchase date stamp.
- Missing payment paperwork certifying the unit purchase.

The manufacturer shall not accept any claims with regards to the condition of the paint-and-lacquer coating (hereinafter PLC) in the following cases:

- Dents, cracks, scratches and abrasions of the PLC sustained during handling, mounting and assembly operations.
- Progress of corrosion on areas damaged with stones, sand, and roof coat tar during the performance of roofing work.
- Signs of direct exposure of the PLC to excessive temperatures, which occurred during the performance of roofing work.
- Violation of regulations on transportation, storage, installation, and operation of the unit.
- Presence of damage caused by exposure to industrial and chemical emissions, acidic or alkaline pollution, sap or other factors not related to normal operating conditions.



FOLLOWING THE REGULATIONS STIPULATED HEREIN WILL ENSURE A LONG AND TROUBLE-FREE OPERATION OF THE UNIT



USER'S WARRANTY CLAIMS SHALL BE SUBJECT TO REVIEW ONLY UPON PRESENTATION OF THE UNIT, THE PAYMENT DOCUMENT AND THE USER'S MANUAL WITH THE PURCHASE DATE STAMP

CERTIFICATE OF ACCEPTANCE

Unit Type	Fire-Resisting Duct Damper
Model	
Serial Number	
Manufacture Date	
Quality Inspector's Stamp	

SELLER INFORMATION

Seller	
Address	
Phone Number	
E-mail	
Purchase Date	
This is to certify acceptance of the complete unit delivery with the user's manual. The warranty terms are acknowledged and accepted.	
Customer's Signature	

Seller's Stamp

INSTALLATION CERTIFICATE

The _____ unit is installed pursuant to the requirements stated in the present user's manual.		
Company name		
Address		
Phone Number		
Installation Technician's Full Name		
Installation Date:	**Signature:**	
The unit has been installed in accordance with the provisions of all the applicable local and national construction, electrical and technical codes and standards. The unit operates normally as intended by the manufacturer.		
Signature:		

Installation Stamp

WARRANTY CARD

Unit Type	Fire-Resisting Duct Damper
Model	
Serial Number	
Manufacture Date	
Purchase Date	
Warranty Period	
Seller	

Seller's Stamp



Manufacturer: Ventilation Systems LLC,
Ukraine, Kyiv, 1 M. Kotsyubynskoho Street
Address of production facilities:
Ukraine, Kyiv Region, Fastiv District, Boyarka, 36 Sobornosti Street

www.blaubergventilatoren.de
B58-1EN-05