BLAUBERG Ventilatoren

# SINGLE-ROOM VENTILATION



**FOR COUNTRIES**
**WITH HOT AND HUMID CLIMATES**

# CONTENTS

2 ABOUT BLAUBERG GROUP

8 INTRODUCTION INTO SINGLE-ROOM VENTILATION


12 CIVIC EC LB V.2


22 CIVIC EC DB V.2


32 FRESHBOX 100 ERV


38 FRESHBOX 100 ERV WI-FI


44 FRESHBOX 110 ERV


50 FRESHBOX 200 ERV WI-FI


56 HYBRID MAX ERV


64 VENTO ERGO A85-3 L035 S PRO V.3


70 VENTO EXPERT A50 C1-1 L035 S W V.2


78 VENTO EXPERT A100-1 L035 S W V.2


84 VENTO ECO A50 C1 L035 S PRO


90 FRESHER 50 SHORT S

BLAUBERG GROUP

# ABOUT US

The **Blauberg Group** is an international group of companies offering complete ventilation and refrigeration solutions.
We are a full-service company developing, manufacturing and supplying the widest possible range of products.

## Blauberg Group

BLAUBERG Ventilatoren · VENTS · BLAUBERG Motoren · ZERN ENGINEERING

### Our products

The Group's companies produce a full range of ventilation products, from domestic fans and air distribution units to high-tech air handling units, single-room and industrial units with heat recovery and modern automation.
Our products combine innovative technologies, modern design, and comply with the international standards for energy efficiency, reliability and safety.



BLAUBERG GROUP

# WHY US?



## Expertise

Over 300 engineers and technicians with expertise in cutting-edge technology provide innovative leadership, product quality and reliability.




## Sustainable development

We create energy efficient ventilation products in environmentally responsible ways striving to leave a minimal footprint by using sustainable raw materials, efficient equipment and by optimizing processes.




## Quality

When purchasing the products of the group, our customers can rely on the performance, safety and environmental compatibility, which is confirmed by numerous tests and certificates.



## Innovation

Our R&D centre specialists in different countries explore and implement advanced technologies and engineering solutions based on international experience, the latest global trends and market needs.

# Blauberg Group worldwide



Blauberg Group offices

Blauberg Group production facilities

Representative and partner offices of the Blauberg Group are located in different countries and continents in order to guarantee timely deliveries and service to our customers.

More than 3 500 highly qualified specialists work in the production area of more than 210 000 square metres to produce modern ventilation products represented in more  than 120 countries worldwide.

**PRODUCTION SITES**

- Germany
- Ukraine
- Poland
- China
- Hungary

**8**
**production facilities**

**14**
**representative offices**

**123**
**countries worldwide**

BLAUBERG GROUP

# Production

The Blauberg Group considers investment in up-to-date machinery, innovations and materials from leading global manufacturers to be one of the decisive success factors in the technology sector.

Annual increases in production rates and line renewals enable optimising product costs and offering the market modern, reliable, energy-efficient, safe solutions that meet the highest quality standards.

## Equipment

TRUMPF, HAAS, AMADA, salvagnini, battenfeld-cincinnati, Fronius, Gema, SPIRO, Schur, MITSUBISHI HEAVY INDUSTRIES LTD, OKUMA, smipack, lucas, IMCAR Bending & Welding Technologies, Wittmann Battenfeld, ITIB MACHINERY, FB Balzanelli Born to Coil, PHOENIX CONTACT, rinco ultrasonics, WEBER, SCHENCK Passion for Balancing, Panasonic, KMW KRAUSS-MAFFEI WEGMANN

## Raw materials

BASF We create chemistry, KUMHO TIRES, LOTTE, INEOS STYROLUTION, CLARIANT, TOSAF, MOL, Anwil GRUPA ORLEN, LG Chem

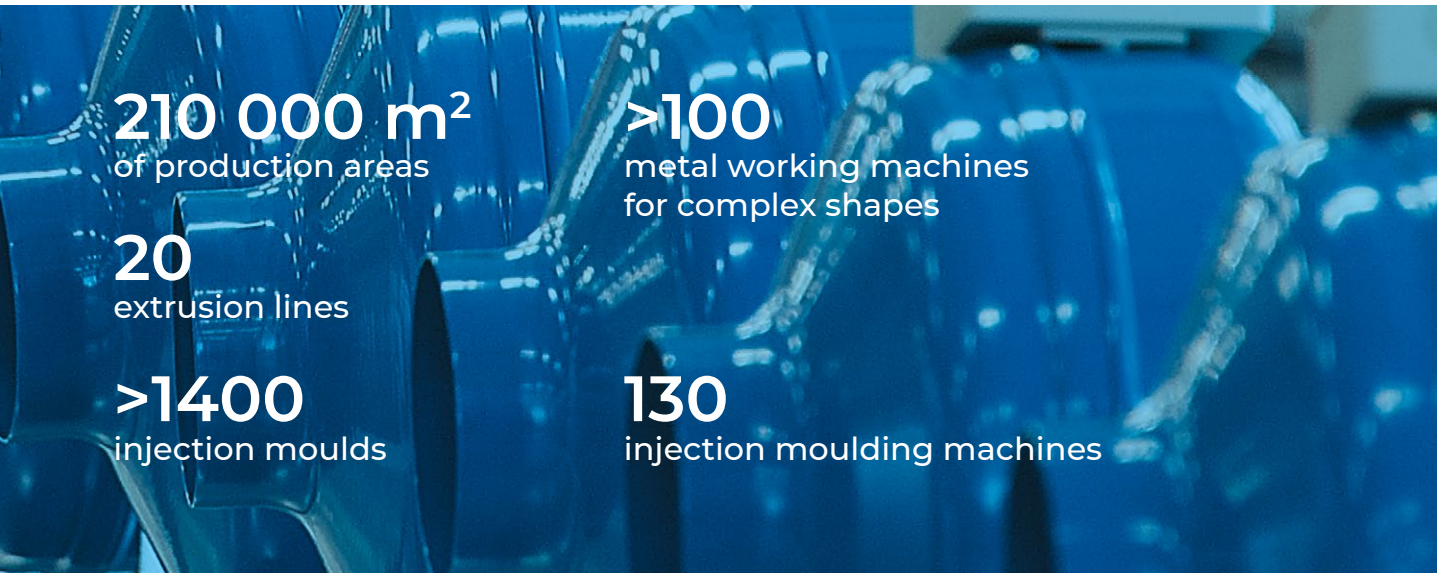

**210 000 m²**
of production areas

**>100**
metal working machines for complex shapes

**20**
extrusion lines

**>1400**
injection moulds

**130**
injection moulding machines

# Quality and expertise

All products in the Group comply with the international quality standards.
Control is carried out at all stages of product manufacture, from design to production processes and quality control of finished products. This is confirmed by certificates and audits from international organisations.

## Audits

## Membership

## Certificates



# What is in the air we breathe?

Breathing clean fresh air is essential for maintaining your health. Overpopulated cities, congested roads, fuming pipes of factories and plants, never-ending development and agricultural activities all have their adverse effects on the air environment. According to the research conducted by the World Health Organisation, the pollution of the air environment and indoor air is a major contributor to the morbidity and mortality around the world. Today 91% of the world population live in cities and have to deal with skyrocketing pollution. The most deleterious effects on the human health are attributed to nitrogen dioxide, harmful particulate matter and elevated ozone concentrations. Buildings under construction and renovation projects may also generate air pollution. A large-scale research of cases related to poor indoor air quality helped to identify the key factors which adversely affect our breathing environment:

## 50 %

### Inefficient ventilation

Inadequate supply of fresh air or poor ducting efficiency.

## 30 %

### Indoor pollutants

The presence of premises-specific pollutants (e.g. formaldehyde, solvent vapours, dust, and microbiological pollution).

## 10 %

### Outdoor pollutants

Pollutants originating from external sources (e.g. vehicle exhaust fumes, pollen, fungal spores, smoke, and dust resulting from roadworks and construction work).

## 10 %

### Other factors

Out-of-range temperature and relative humidity which cause occupant discomfort.

### The typical signs of excessively high humidity are:

- Heavy levels of condensation on the inside of window panes
- Damp stains on ceilings and/or walls
- Wallpaper bubbling and coming off the wall
- Drawers and doors sticking
- Mould and resulting physical discomfort

# Why do we need ventilation?

## Fresh air
The basic purpose of ventilation is to supply clean fresh air into the room.

## Balancing the pressure
Ventilation must be properly balanced. Low indoor pressure in the absence of supply units equipped with filters causes dirty outdoor air to seep in through various cracks and openings – moreover, if the walls and windows are air-tight, it will find its way in through the sewerage system if it isn't properly sealed.

## A comfortable breathing environment
Extract fans remove cold stale air from the building and while wet warm air enters the premises through cracks and leaks in window panes and door assemblies causing a degradation in the indoor air quality and increase a humidity level.

Buildings should be tight – but they should still be able to breathe.
It means that buildings should be tight so that we do not use too much energy on cooling or heating and that they should be able to breathe in order for humid and 'used' air to escape. Buildings should not breathe through random holes, but through controlled and on-demand ventilation.
Not all buildings have a good indoor climate. This is often because the building contains too much humidity. This can cause both health-related and financial problems. For the building this can mean rot and mould in the structure which can give us asthma and allergies if they are allowed to develop. More and more people are diagnosed with asthma and allergies. Part of the explanation is a poor indoor climate.
The air is damp. Your eyes are dry and irritated. Your head seems heavy and you have difficulties concentrating. A poor indoor climate has a big impact on our ability to function and well-being in our daily life.
Surveys show that a poor indoor climate negatively impacts our performance levels by 5-10%. For children this impact is even greater. That is why we need ventilation.



# Ways to organise ventilation in a premise

## CENTRALISED
### ventilation systems

A single unit is responsible for exchanging the air in all the rooms of a house or a flat.

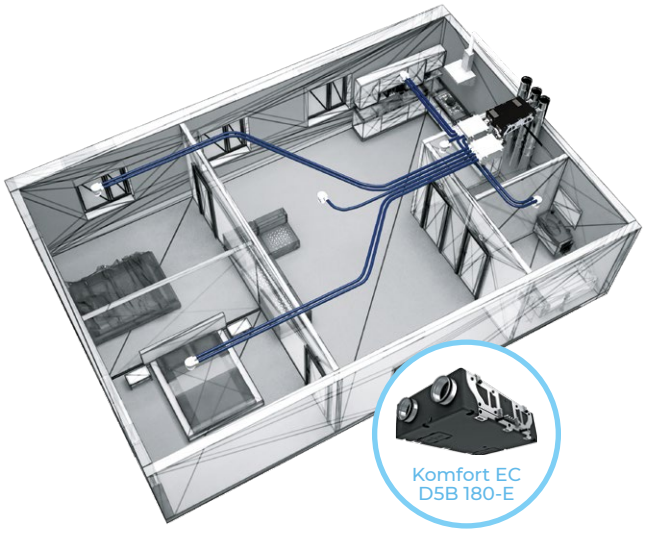


### Features

- This unit supplies fresh air which is cleaned by the built-in filters and extracts stale air from the room.
- A single air handling unit is capable of providing efficient ventilation for the entire home.
- The unit requires a system of air ducts.
- The ventilation modes are selected automatically by the built-in control system.
- Heat energy recovery helps save energy.
- The ventilation system design must prevent air leaks from the spaces filled with stale air into those with fresh air.
- A properly designed system is essential for ensuring an intensive air exchange essential to the occupant comfort.
- The ventilation system operating modes are adjusted from a single point for all the spaces in the home.

## SINGLE-ROOM
### ventilation systems

Air supply and extraction are carried out by a separate ventilation unit in each room.




### Features

- Fresh air intake, filtration and stale air exhaust to outside.
- Compact ventilators do not require any additional elements or ducts, they are ready for use and designed for direct wall mounting in the outer walls of buildings.
- An individual air flow adjustment is possible for each room of a house or an apartment.
- It is necessary to determine only the performance of the unit at design phase, which significantly simplifies the calculations.
- Low fan power due to direct air discharge contributes to low-noise operation.
- Heat recovery and humidity balance in the premises are achieved through the use of heat exchangers.
- Reduce heating costs in winter and air conditioning costs in summer.

# SINGLE-ROOM
## ventilation system arrangement

Single-room ventilation system is the most modern and practical solution for creating a comfortable breathing environment and necessary air exchange in reconstructed premises, new and newly settled houses or in residential renovated apartments.

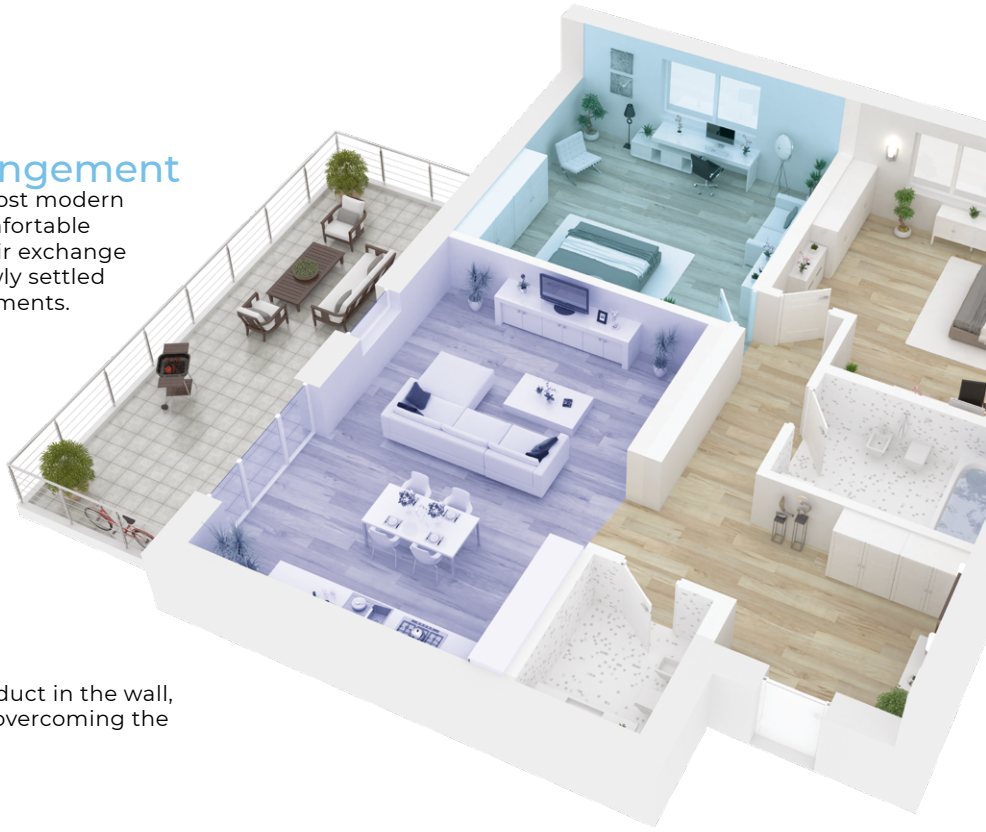

Single-room ventilation improves fire safety due to the absence of air ducts between individual spaces.
Fresh air is supplied through a short air duct in the wall, and the unit does not spend energy on overcoming the resistance of long ducts.

### Units with a plate heat exchanger (Freshbox, CIVIC)

- Ensure comfortable breathing environment in a particular room.
- Each space is ventilated on demand.
- Unit speed is set automatically to ensure the proper air quality.
- Direct mounting into the wall.
- Mounting into thin walls without reducing efficiency.
- Simple design makes it fit into any interior.

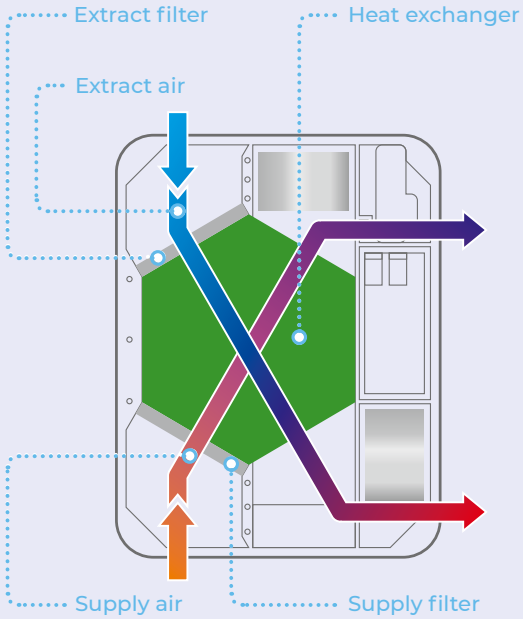


### Units with a ceramic heat exchanger (Vento Expert)

- Ensure a comfortable breathing environment in a particular room.
- Balanced ventilation when even number of units is installed.
- The unit is mounted directly into the wall.
- High efficiency.
- Moisture recovery and no condensate formed.
- Low noise level.
- Suitable for mounting into thin walls without reducing efficiency.
- May be equipped with filters with high filtration efficiency.
- Minimum indoor unit size and easy maintenance.
- May be equipped with an external hood for air outlet to the window aperture, which allows retaining appearance of the facade.

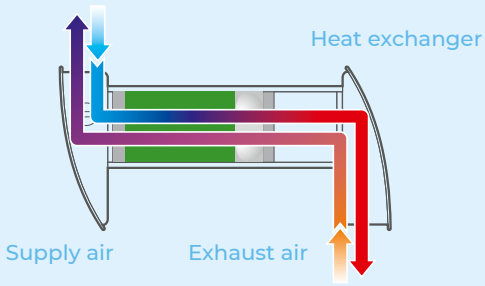



# CIVIC EC LB V.2

## DECENTRALIZED SUPPLY AND EXHAUST UNIT WITH HEAT AND ENERGY RECOVERY

**1240** m³/h

from **21** dBA

up to **89** %



## FEATURES

The **CIVIC EC LB V.2** units are designed for singleroom ventilation of schools, offices and other public and commercial premises. Offer the ideal simple and efficient ventilation solutions for existing and renovated buildings and require no layout of air ducts.

Efficient supply and extract ventilation for separate premises.

EC motors with low energy consumption.

Low-noise operation.

Simple mounting.

Air ducts can be taken out through the windows.

## Designation key

| Model | Motor type | Mounting | Bypass | Drain pump | Rated air flow [m³/h] | Heat exchanger type | Service side (for Civic... 1200) | Control | Modernization |
|---|---|---|---|---|---|---|---|---|---|
| **CIVIC** | **EC:** synchronous electronically commutated motor | **L:** floor mounting | **B:** with bypass | **_:** without drain pump<br>**CP:** with drain pump | 300; 500; 1200 | **_:** heat recovery<br>**-E:** energy recovery | **L:** Left<br>**R:** Right | S21 | **V.2:** second modernized generation |

## Design

Made of high-quality polymer coated steel, internally lined with heat- and sound insulation of mineral wool, cellular synthetic rubber or other materials.

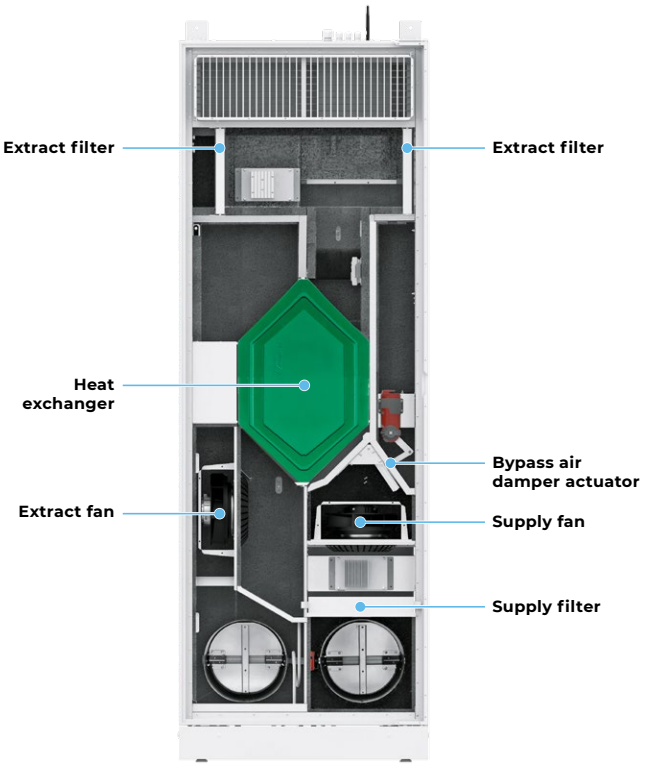


## Motors

High efficient electronically commutated motors with external motor and impeller with forward curved blades. Such motors are the most state-of-the-art energy saving solution.

EC motors are featured with high performance and total speed controllable range. High efficiency reaching 90 % is the premium advantage of the electronically commutated motors.

## Air filtration

Exhaust cassette filter: ISO Coarse >60 % (G4).

Supply cassette filter: ISO ePM1 60 % (F7)

## Bypass

The units are equipped with a bypass. The bypass damper opens for free cooling ventilation mode when outside fresh air is colder than room air.

## Air dampers

The automatic supply and extract air dampers are used to prevent uncontrollable air draughts during the unit standstill.

## Heat exchanger




The **CIVIC EC LB... -E V.2** unit is equipped with a counter-flow heat exchanger made of enthalpy membrane.

- In cold season the heat and moisture of the extract air are absorbed by supply air through the enthalpy membrane, thus decreasing the heat losses caused by ventilation.
- In warm season the heat and humidity of the outdoor air is absorbed by extract air flow through the enthalpy membrane. This way the supply air temperature and humidity decreases and heat recovery reduces operation loads for the air conditioner.

## Functioning

Warm and humid outside air flows through the filters and heat exchanger and is moved to the room with a supply centrifugal fan.

Cooled polluted air from the premise flows through the filter and the heat exchanger and is exhausted outside with an extract centrifugal fan through an air duct in the wall.



## Mounting example



**Air ducts can be taken out through the windows**

## Control and automation

The **CIVIC EC LB... S21 V.2** units are equipped with an integrated automation system.

The S21 controller allows integrating the unit into the **BMS (Building Management System)**.

The unit can be controlled by the Blauberg Home mobile application via Wi-Fi.

Download the Blauberg Home app for Android

Download the Blauberg Home app for iOS

Modbus

Hey Google

## Automation functions

| Functions | Description |
|---|---|
| **Unit control via Wi-Fi using the mobile application** | + |
| **Unit control via remote control panel** |  S22 control panel (option) |
| **Unit control via remote wireless control panel** |  S22 Wi-Fi control panel (option) |
| **Unit control via a wired remote LCD control panel** |  S25 control panel (option) |
| **BMS (Building Management System)** | RS-485 |
| | Wi-Fi |
| | Ethernet |
| | MODBUS (RTU, TCP) |
| **Speed switch** | + |
| **Filter replacement indication** | by filter timer |
| **Alarm indication** | full alarm description in the mobile application |
| **Week scheduled operation** | + |
| **Bypass** | automatic |
| | manual |
| **Timer** | + |
| **Boost mode** | + |
| **Fireplace mode** | + |
| **Minimum supply air temperature control** | + |
| **$CO_2$ control** | option |
| **VOC control** | option |
| **PM2.5 control** | option |
| **Fire alarm sensor connection** | option |

Option: the functionality is available when purchasing the appropriate accessory (see the "Accessories" section)

# Technical data

| Parameters | Civic EC LB 300-E S21 V.2 |
|---|---|
| **Voltage [V / 50 (60) Hz]** | 1~230 |
| **Max. power consumption [W]** | 96 |
| **Max. current [A]** | 0.75 |
| **Maximum air flow [m³/h (l/s)]** | 320 (89) |
| **Sound pressure level at 1 m [dBA]** | 47 |
| **Sound pressure level at 3 m [dBA]** | 37 |
| **Max. transported air temperature [°C]** | –25...+40 |
| **Casing material** | polymer coated steel |
| **Insulation** | 40 mm, mineral wool |
| **Extract filter** | ISO Coarse >60 % (G4) |
| **Supply filter** | ISO ePM1 60 % (F7) |
| **Connected air duct diameter [mm]** | 200 |
| **Weight [kg]** | 100 |
| **Temperature exchange efficiency (heating) [%]** | 80...89 |
| **Temperature exchange efficiency (cooling) [%]** | 70...85 |
| **Enthalpy exchange efficiency (heating) [%]** | 72...82 |
| **Enthalpy exchange efficiency (cooling) [%]** | 70...80 |
| **Heat exchanger type** | counter-flow |
| **Heat exchanger material** | enthalpic membrane |

| Sound-power level, A - weighted | Total | Octave frequency band [Hz] | | | | | | | | | | | | | | | | | | | LpA 3 m | LpA 1 m |
|---|---|---|---|---|---|---|---|---|---|---|---|---|---|---|---|---|---|---|---|---|---|---|
| | | 200 | 250 | 315 | 400 | 500 | 630 | 800 | 1000 | 1250 | 1600 | 2000 | 2500 | 3150 | 4000 | 5000 | 6300 | 8000 | 10000 | | | |
| LwA to environment at point 1 [dBA] | 58 | 46 | 50 | 48 | 44 | 49 | 48 | 43 | 46 | 46 | 47 | 48 | 45 | 39 | 32 | 27 | 24 | 26 | 25 | | 37 | 47 |
| LwA to environment at point 5 [dBA] | 49 | 29 | 39 | 34 | 40 | 41 | 39 | 35 | 38 | 38 | 39 | 39 | 35 | 28 | 22 | 20 | 20 | 23 | 24 | | 29 | 38 |
| LwA to environment at point 9 [dBA] | 42 | 30 | 33 | 31 | 29 | 36 | 32 | 26 | 31 | 30 | 30 | 30 | 26 | 21 | 19 | 19 | 19 | 23 | 24 | | 22 | 31 |
| LwA to environment at point 3 [dBA] | 58 | 46 | 50 | 47 | 44 | 49 | 48 | 44 | 46 | 46 | 47 | 47 | 44 | 39 | 33 | 28 | 24 | 25 | 25 | | 37 | 47 |
| LwA to environment at point 4 [dBA] | 58 | 46 | 50 | 48 | 45 | 50 | 48 | 43 | 46 | 46 | 47 | 48 | 45 | 39 | 32 | 27 | 23 | 25 | 25 | | 38 | 47 |

| Point | Total power of the unit [W] | Total sound pressure level at 3 m (1 m) [dBA] |
|---|---|---|
| **1** | 92 | 37 (47) |
| **2** | 91 | – |
| **3** | 85 | 37 (47) |
| **4** | 75 | 38 (47) |
| **5** | 40 | 29 (38) |
| **6** | 38 | – |

| Point | Total power of the unit [W] | Total sound pressure level at 3 m (1 m) [dBA] |
|---|---|---|
| **7** | 35 | – |
| **8** | 32 | – |
| **9** | 19 | 22 (31) |
| **10** | 18 | – |
| **11** | 17 | – |

| Parameters | Civic EC LB 500-E S21 V.2 |
|---|---|
| **Voltage [V / 50 (60) Hz]** | 1~230 |
| **Max. power consumption [W]** | 370 |
| **Max. current [A]** | 2.5 |
| **Maximum air flow [m³/h (l/s)]** | 580 (161) |
| **Sound pressure level at 1 m [dBA]** | 47 |
| **Sound pressure level at 3 m [dBA]** | 38 |
| **Max. transported air temperature [°C]** | –25...+40 |
| **Casing material** | polymer coated steel |
| **Insulation** | 40 mm, mineral wool |
| **Extract filter** | ISO Coarse >60 % (G4) |
| **Supply filter** | ISO ePM1 60 % (F7) |
| **Connected air duct diameter [mm]** | 250 |
| **Weight [kg]** | 139 |
| **Temperature exchange efficiency (heating) [%]** | 70...82 |
| **Temperature exchange efficiency (cooling) [%]** | 69...80 |
| **Enthalpy exchange efficiency (heating) [%]** | 70...78 |
| **Enthalpy exchange efficiency (cooling) [%]** | 67...75 |
| **Heat exchanger type** | counter-flow |
| **Heat exchanger material** | enthalpic membrane |

| Sound-power level, A - weighted | Total | Octave frequency band [Hz] | | | | | | | | | | | | | | | | | | | LpA 3 m | LpA 1 m |
|---|---|---|---|---|---|---|---|---|---|---|---|---|---|---|---|---|---|---|---|---|---|---|
| | | 200 | 250 | 315 | 400 | 500 | 630 | 800 | 1000 | 1250 | 1600 | 2000 | 2500 | 3150 | 4000 | 5000 | 6300 | 8000 | 10000 | | | |
| LwA to environment at point 1 [dBA] | **57** | 47 | 52 | 51 | 48 | 47 | 44 | 45 | 45 | 44 | 46 | 48 | 45 | 38 | 30 | 27 | 25 | 26 | 27 | | **38** | **47** |
| LwA to environment at point 5 [dBA] | **49** | 44 | 37 | 36 | 42 | 38 | 38 | 37 | 38 | 37 | 39 | 41 | 37 | 29 | 24 | 23 | 22 | 25 | 26 | | **28** | **39** |
| LwA to environment at point 9 [dBA] | **37** | 28 | 27 | 26 | 31 | 29 | 28 | 28 | 29 | 27 | 27 | 28 | 25 | 21 | 20 | 21 | 22 | 25 | 27 | | **17** | **27** |
| LwA to environment at point 3 [dBA] | **55** | 47 | 46 | 42 | 47 | 46 | 43 | 43 | 43 | 43 | 43 | 45 | 42 | 35 | 29 | 27 | 24 | 26 | 27 | | **35** | **45** |
| LwA to environment at point 4 [dBA] | **47** | 49 | 48 | 49 | 52 | 51 | 50 | 50 | 49 | 48 | 46 | 46 | 44 | 38 | 33 | 30 | 27 | 28 | 28 | | **28** | **37** |

| Point | Total power of the unit [W] | Total sound pressure level at 3 m (1 m) [dBA] |
|---|---|---|
| **1** | 236 | 37 (47) |
| **2** | 236 | – |
| **3** | 234 | 35 (45) |
| **4** | 234 | 28 (37) |
| **5** | 80 | 28 (39) |
| **6** | 78 | – |

| Point | Total power of the unit [W] | Total sound pressure level at 3 m (1 m) [dBA] |
|---|---|---|
| **7** | 76 | – |
| **8** | 75 | – |
| **9** | 21 | 17 (27) |
| **10** | 19 | – |
| **11** | 20 | – |

| Parameters | Civic EC LB 1200 S21 V.2 |
|---|---|
| **Voltage [V / 50 (60) Hz]** | 1~230 |
| **Max. power consumption [W]** | 345 |
| **Max. current [A]** | 2.3 |
| **Maximum air flow [m³/h (l/s)]** | 1240 (344) |
| **Sound pressure level at 1 m [dBA]** | 40 |
| **Sound pressure level at 3 m [dBA]** | 30 |
| **Max. transported air temperature [°C]** | –25...+40 |
| **Casing material** | polymer coated steel |
| **Insulation** | 40 mm, mineral wool |
| **Extract filter** | ISO Coarse >60 % (G4) |
| **Supply filter** | ISO ePM1 60 % (F7) |
| **Connected air duct diameter [mm]** | 400 |
| **Weight [kg]** | 352 |
| **Temperature exchange efficiency (heating) [%]** | 70...83 |
| **Temperature exchange efficiency (cooling) [%]** | 68...81 |
| **Enthalpy exchange efficiency (heating) [%]** | 66...80 |
| **Enthalpy exchange efficiency (cooling) [%]** | 65...80 |
| **Heat exchanger type** | counter-flow |
| **Heat exchanger material** | enthalpic membrane |

| Sound-power level, A - weighted | Total | Octave frequency band [Hz] | | | | | | | | LpA 3 m | LpA 1 m |
|---|---|---|---|---|---|---|---|---|---|---|---|
| | | 63 | 125 | 250 | 500 | 1000 | 2000 | 4000 | 8000 | | |
| LwA to environment at point 1 [dBA] | 50 | 31 | 35 | 40 | 37 | 36 | 36 | 28 | 17 | 30 | 40 |
| LwA to environment at point 5 [dBA] | 47 | 27 | 31 | 33 | 29 | 30 | 27 | 22 | 13 | 26 | 36 |
| LwA to environment at point 9 [dBA] | 32 | 21 | 27 | 21 | 25 | 17 | 19 | 24 | 16 | 11 | 21 |

| Point | Total power of the unit [W] | Total sound pressure level at 3 m (1 m) [dBA] |
|---|---|---|
| **1** | 315 | 30 (40) |
| **2** | 312 | – |
| **3** | 311 | 30 (40) |
| **4** | 308 | 26 (36) |
| **5** | 122 | 15 (25) |
| **6** | 121 | – |

| Point | Total power of the unit [W] | Total sound pressure level at 3 m (1 m) [dBA] |
|---|---|---|
| **7** | 120 | – |
| **8** | 118 | – |
| **9** | 24 | 11 (21) |
| **10** | 23 | – |
| **11** | 22 | – |

### CIVIC EC LB 300-E V.2

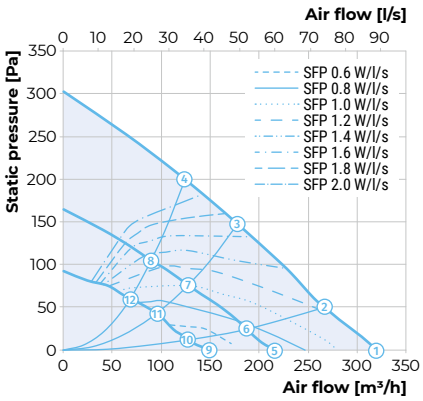


### CIVIC EC LB 500-E V.2

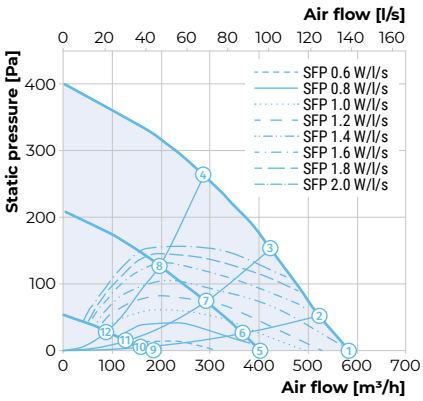


### CIVIC EC LB 1200 V.2

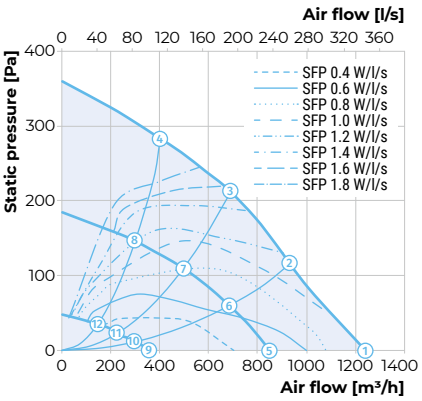


### Fresh air flow distance for CIVIC EC LB 300-E V.2

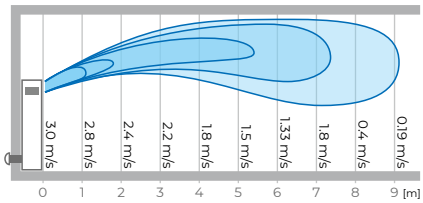


### Fresh air flow distance for CIVIC EC LB 500-E V.2

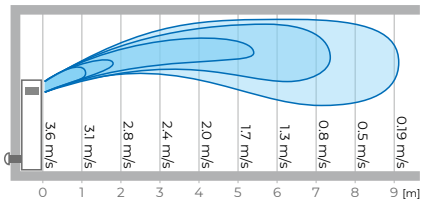


### Fresh air flow distance for CIVIC EC LB 1200 V.2

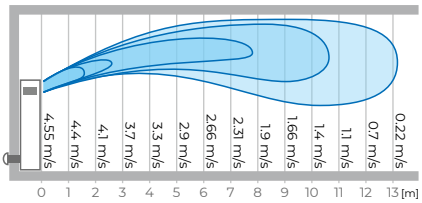


The unit is rated for indoor application with the ambient temperature ranging from +1 °C to +40 °C and relative humidity up to 80 %

## Dimensions [mm]

| Model | Ø D | H | H1 | H2 | H3 | H4 | L | L1 | W | W1 | W2 |
|---|---|---|---|---|---|---|---|---|---|---|---|
| CIVIC EC LB 300-E V.2 | 200 | 1775 | 1485 | 285 | – | – | 470 | 520 | 620 | 310 | 155 |
| CIVIC EC LB 500-E V.2 | 250 | 2170 | 1865 | 305 | – | – | 535 | 585 | 750 | 350 | 200 |
| CIVIC EC LB 1200 V.2 | 400 | 2000 | 2106 | 545 | 1110 | 70 | 535 | 265 | 1900 | 1951 | – |

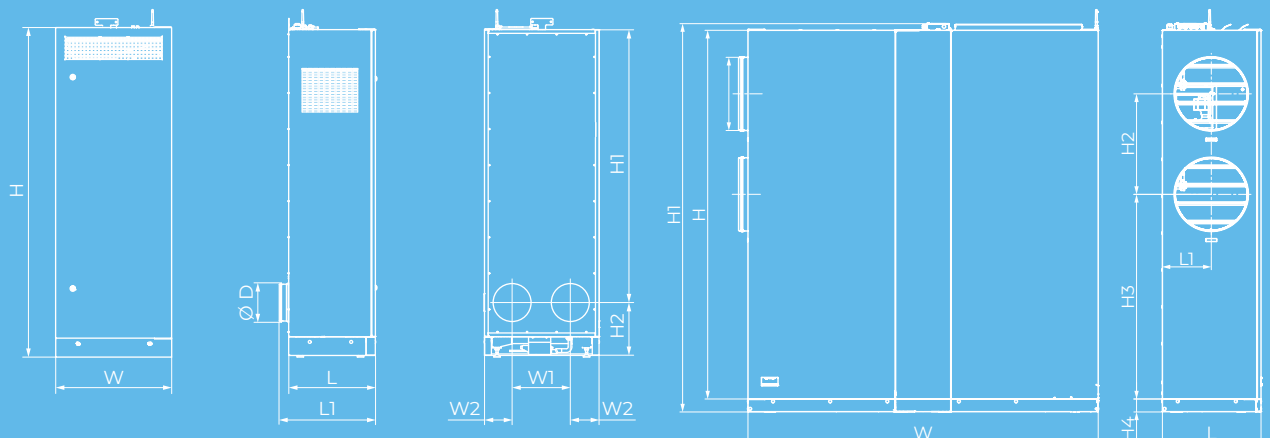


CIVIC EC LB 300-E V.2 / CIVIC EC LB 500-E V.2




CIVIC EC LB 1200 V.2

# Accessories

| | | Civic EC LB 300-E S21 V.2 | Civic EC LB 500-E S21 V.2 | Civic EC LB 1200 S21 V.2 |
|---|---|---|---|---|
| **Outer ventilation hood made of brushed stainless steel** |  | AH Civic 300 LB chrome | AH Civic 500 LB chrome | AH Civic 1200 LB chrome |
| **Outer ventilation hood made of white coated stainless steel** |  | AH Civic 300 LB white | AH Civic 500 LB white | AH Civic 1200 LB white |
| **Extract filter ISO Coarse >60 % (G4)** |  | FP 203x308x20 G4 (2 pcs.) | FP 255x448x25 G4 (2 pcs.) | FP 450x395x48 G4 |
| **Supply filter ISO ePM1 60 % (F7)** |  | FP 384x273x60 F7 | FP 449x318x60 F7 | FP 540x450x48 F7 |
| **Control panel** |  | S22 | S22 | S22 |
| **Wi-Fi control panel** |  | S22 Wi-Fi | S22 Wi-Fi | S22 Wi-Fi |
| **LCD Control panel** |  | S25 | S25 | S25 |
| **VOC sensor** |  | DPWQ30600 | DPWQ30600 | DPWQ30600 |
| **$CO_2$ sensor** |  | DPWQ40200 | DPWQ40200 | DPWQ40200 |
| **$CO_2$ sensor with indication** |  | CD-1 | CD-1 | CD-1 |
| **$CO_2$ sensor** |  | CD-2 | CD-2 | CD-2 |

| | | Civic EC LB 300-E S21 V.2 | Civic EC LB 500-E S21 V.2 | Civic EC LB 1200 S21 V.2 |
|---|---|---|---|---|
| **$CO_2$ sensor** |  | CD-3 | CD-3 | CD-3 |
| **Syphon kit** |  | SFK 20x32 | SFK 20x32 | SFK 20x32 |
| **Drain pump** |  | CP-2 | CP-2 | CP-2 |



# CIVIC EC DB V.2

## DECENTRALIZED SUPPLY AND EXHAUST UNIT WITH HEAT AND ENERGY RECOVERY



**1000** m³/h

from **24** dBA

up to **96** %

EC motor · ErP 2016 · ErP 2018 · Wi Fi READY · BMS · Hey Google

## FEATURES

The **CIVIC EC DB V.2** units are designed for single-room ventilation of schools, offices and other public and commercial premises. Offer the ideal simple and efficient ventilation solutions for existing and renovated buildings and require no layout of air ducts.

Efficient supply and extract ventilation for separate premises.

EC motors with low energy consumption.

Low-noise operation.

Simple mounting.

Air ducts can be taken out through the windows.

## Designation key

| Model | Motor type | Mounting | Bypass | Drain pump* | Rated air flow [m³/h] | Heat exchanger type | Control | Modernization |
|---|---|---|---|---|---|---|---|---|
| **CIVIC** | **EC:** synchronous electronically commutated motor | **D:** Suspended mounting, horizontally oriented spigots;<br>**D1:** Suspended mounting, vertically oriented spigots | **B:** with bypass | **_:** without drain pump<br>**CP:** with drain pump | 300; 500; 1000 | **_:** heat recovery<br>**-E:** energy recovery | S21 | **V.2:** second modernized generation |

* The CIVIC EC DB... 1000 S21 V.2 units are equipped with a drain pump by default.

## Design

Made of high-quality polymer coated steel, internally lined with heat- and sound insulation of mineral wool, cellular synthetic rubber or other materials.

## Motors

High efficient electronically commutated motors with external motor and impeller with forward curved blades. Such motors are the most state-of-the-art energy saving solution.

EC motors are featured with high performance and total speed controllable range. High efficiency reaching 90% is the premium advantage of the electronically commutated motors.

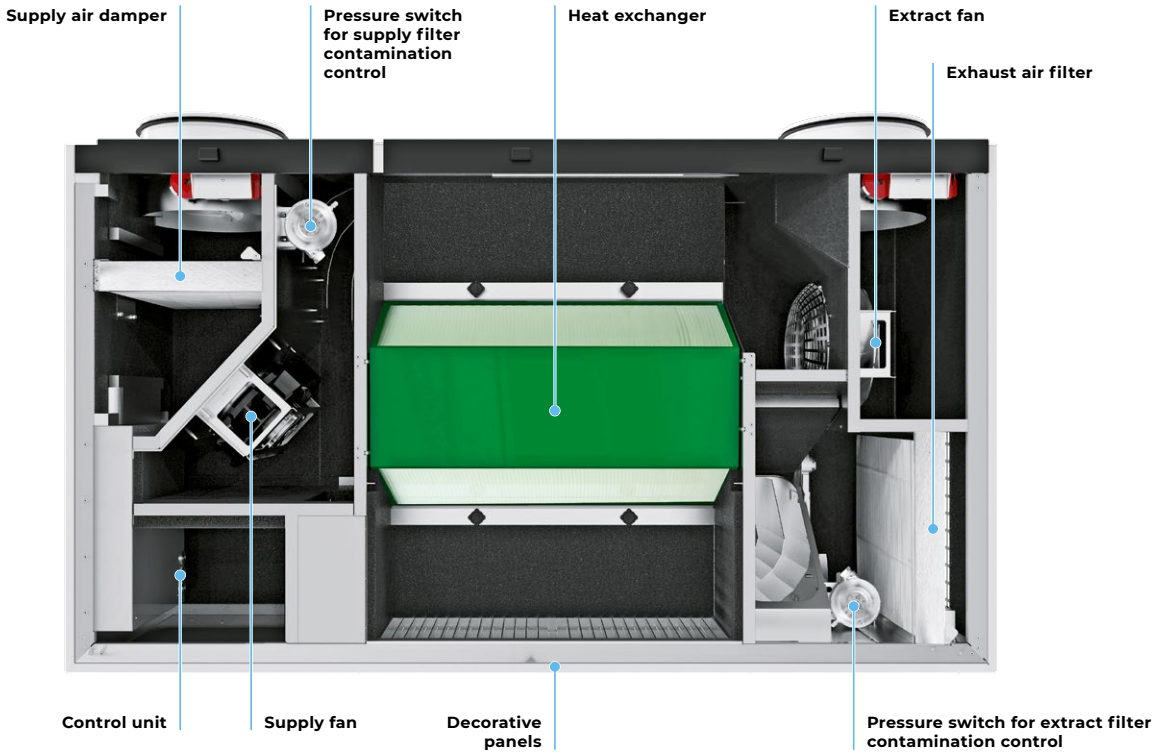


## Air filtration

Exhaust cassette filter: ISO Coarse >60 % (G4).

Supply cassette filter: ISO ePM1 60 % (F7)

## Air dampers

The automatic supply and extract air dampers are used to prevent uncontrollable air draughts during the unit standstill.

## Bypass

The units are equipped with a bypass. The bypass damper opens for free cooling ventilation mode when outside fresh air is colder than room air.

## Heat exchanger




The **CIVIC EC DB... -E V.2** unit is equipped with a counter-flow heat exchanger made of enthalpy membrane.

- In cold season the heat and moisture of the extract air are absorbed by supply air through the enthalpy membrane, thus decreasing the heat losses caused by ventilation.
- In warm season the heat and humidity of the outdoor air is absorbed by extract air flow through the enthalpy membrane. This way the supply air temperature and humidity decreases and heat recovery reduces operation loads for the air conditioner.

## Functioning

**Cold outside air** flows through the filters and heat exchanger and is moved to the room with a supply centrifugal fan.

**Warm polluted air from the premise** flows through the filter and the heat exchanger and is exhausted outside with an extract centrifugal fan through an air duct in the wall.

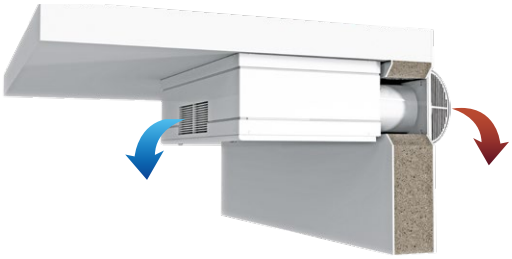

## Control and automation

The **CIVIC EC DB S21 V.2** units are equipped with an integrated automation system.

The S21 controller allows integrating the unit into the **BMS (Building Management System)**.

The unit can be controlled by the Blauberg Home mobile application via Wi-Fi.

| | | |
|---|---|---|
| Download the Blauberg Home app for Android | Download the Blauberg Home app for iOS | Modbus<br>Hey Google |

## Automation functions

| Functions | Description |
|---|---|
| **Unit control via Wi-Fi using the mobile application** | + |
| **Unit control via remote control panel** |  S22 control panel (option) |
| **Unit control via remote wireless control panel** |  S22 Wi-Fi control panel (option) |
| **Unit control via a wired remote LCD control panel** |  S25 control panel (option) |
| **BMS (Building Management System)** | RS-485 |
| | Wi-Fi |
| | Ethernet |
| | MODBUS (RTU, TCP) |
| **Speed switch** | + |
| **Filter replacement indication** | by filter timer |
| **Alarm indication** | full alarm description in the mobile application |
| **Week scheduled operation** | + |
| **Bypass** | automatic |
| | manual |
| **Timer** | + |
| **Boost mode** | + |
| **Fireplace mode** | + |
| **Minimum supply air temperature control** | + |
| **Humidity control** | option |
| **$CO_2$ control** | option |
| **VOC control** | option |
| **PM2.5 control** | option |
| **Fire alarm sensor connection** | option |

Option: the functionality is available when purchasing the appropriate accessory (see the "Accessories" section)

# Technical data

| Parameters | CIVIC EC DB 300-E S21 V.2 |
|---|---|
| **Voltage [V / 50 (60) Hz]** | 1~ 230 |
| **Max. power consumption [W]** | 204 |
| **Max. current [A]** | 1.5 |
| **Maximum air flow [m³/h (l/s)]** | 300 (83) |
| **Sound pressure level at 1 m [dBA]** | 44 |
| **Sound pressure level at 3 m [dBA]** | 34 |
| **Max. transported air temperature [°C]** | –25...+40 |
| **Casing material** | polymer coated steel |
| **Insulation** | 25 mm, EPDM (polyurethane foam) |
| **Extract filter** | ISO Coarse >60 % (G4) |
| **Supply filter** | ISO ePM1 60 % (F7) |
| **Connected air duct diameter [mm]** | 200 |
| **Weight [kg]** | 78 |
| **Temperature exchange efficiency (heating) [%]** | 80...89 |
| **Temperature exchange efficiency (cooling) [%]** | 70...85 |
| **Enthalpy exchange efficiency (heating) [%]** | 72...82 |
| **Enthalpy exchange efficiency (cooling) [%]** | 70...80 |
| **Heat exchanger type** | counter–flow |
| **Heat exchanger material** | enthalpic membrane |

| Sound-power level, A - weighted | Total | Octave frequency band [Hz] | | | | | | | | | | | | | | | | | | LpA 3 m | LpA 1 m |
|---|---|---|---|---|---|---|---|---|---|---|---|---|---|---|---|---|---|---|---|---|---|
| | | 200 | 250 | 315 | 400 | 500 | 630 | 800 | 1000 | 1250 | 1600 | 2000 | 2500 | 3150 | 4000 | 5000 | 6300 | 8000 | 10000 | | |
| LwA to environment at point 1 [dBA] | 54.9 | 45.3 | 47.5 | 47.8 | 41.0 | 46.2 | 42.0 | 40.1 | 40.3 | 40.7 | 40.8 | 43.5 | 42.3 | 35.2 | 27.4 | 23.8 | 21.6 | 24.6 | 24.6 | 43.9 | 34.4 |
| LwA to environment at point 5 [dBA] | 48.2 | 46.3 | 35.4 | 33.2 | 35.5 | 33.9 | 31.5 | 31.1 | 31.2 | 32.6 | 33.1 | 34.1 | 30.7 | 23.4 | 19.6 | 19.3 | 19.7 | 23.3 | 24.4 | 37.3 | 27.7 |
| LwA to environment at point 9 [dBA] | 37.2 | 29.3 | 29.7 | 26.0 | 27.4 | 26.6 | 24.3 | 23.2 | 23.0 | 22.6 | 21.3 | 22.3 | 20.0 | 18.2 | 18.0 | 18.5 | 19.3 | 23.0 | 24.3 | 26.2 | 16.6 |
| LwA to environment at point 3 [dBA] | 55.3 | 46.5 | 49.5 | 49.9 | 40.5 | 43.2 | 39.9 | 38.2 | 39.1 | 40.0 | 39.9 | 42.3 | 41.4 | 34.6 | 27.2 | 24.0 | 21.7 | 24.6 | 24.4 | 44.4 | 34.8 |
| LwA to environment at point 4 [dBA] | 55.1 | 45.2 | 50.0 | 48.6 | 40.7 | 43.2 | 40.3 | 38.6 | 39.1 | 40.3 | 40.1 | 42.5 | 41.5 | 34.8 | 27.2 | 24.0 | 21.7 | 24.8 | 24.6 | 44.1 | 34.5 |

| Point | Total power of the unit [W] | Total sound pressure level at 3 m (1 m) [dBA] |
|---|---|---|
| **1** | 125 | 34 (44) |
| **2** | 116 | 34 (44) |
| **3** | 104 | – |
| **4** | 86 | 35 (44) |
| **5** | 48 | 28 (38) |
| **6** | 44 | – |

| Point | Total power of the unit [W] | Total sound pressure level at 3 m (1 m) [dBA] |
|---|---|---|
| **7** | 42 | – |
| **8** | 36 | – |
| **9** | 17 | 17 (26) |
| **10** | 17 | – |
| **11** | 16 | – |
| **12** | 16 | – |

| Parameters | CIVIC EC DB 500-E S21 V.2 |
|---|---|
| **Voltage [V / 50 (60) Hz]** | 1~ 230 |
| **Max. power consumption [W]** | 238 |
| **Max. current [A]** | 1.7 |
| **Maximum air flow [m³/h (l/s)]** | 510 (142) |
| **Sound pressure level at 1 m [dBA]** | 44 |
| **Sound pressure level at 3 m [dBA]** | 34 |
| **Max. transported air temperature [°C]** | –25...+40 |
| **Casing material** | polymer coated steel |
| **Insulation** | 25 mm, EPDM (polyurethane foam) |
| **Extract filter** | ISO Coarse >60 % (G4) |
| **Supply filter** | ISO ePM1 60 % (F7) |
| **Connected air duct diameter [mm]** | 250 |
| **Weight [kg]** | 95 |
| **Temperature exchange efficiency (heating) [%]** | 70...82 |
| **Temperature exchange efficiency (cooling) [%]** | 69...80 |
| **Enthalpy exchange efficiency (heating) [%]** | 70...78 |
| **Enthalpy exchange efficiency (cooling) [%]** | 67...75 |
| **Heat exchanger type** | counter–flow |
| **Heat exchanger material** | enthalpic membrane |

| Sound-power level, A - weighted | Total | Octave frequency band [Hz] | | | | | | | | | | | | | | | | | | | LpA 3 m | LpA 1 m |
|---|---|---|---|---|---|---|---|---|---|---|---|---|---|---|---|---|---|---|---|---|---|---|
| | | 200 | 250 | 315 | 400 | 500 | 630 | 800 | 1000 | 1250 | 1600 | 2000 | 2500 | 3150 | 4000 | 5000 | 6300 | 8000 | 10000 | | | |
| LwA to environment at point 1 [dBA] | 54.7 | 44.7 | 48.8 | 46.3 | 45.7 | 41.3 | 38.8 | 40.9 | 40.4 | 40.2 | 42.8 | 43.0 | 40.0 | 32.8 | 27.7 | 25.7 | 23.6 | 25.9 | 25.8 | 43.7 | 34.1 |
| LwA to environment at point 5 [dBA] | 48.2 | 44.7 | 37.8 | 37.3 | 38.6 | 32.7 | 31.5 | 32.8 | 33.0 | 32.8 | 35.3 | 35.1 | 31.2 | 23.8 | 20.7 | 20.2 | 19.8 | 23.2 | 24.2 | 37.2 | 27.7 |
| LwA to environment at point 9 [dBA] | 33.6 | 22.9 | 21.9 | 27.0 | 24.3 | 17.8 | 17.1 | 17.6 | 16.9 | 16.4 | 17.2 | 17.6 | 17.1 | 17.5 | 17.8 | 18.7 | 19.5 | 23.0 | 24.1 | 22.6 | 13.0 |
| LwA to environment at point 3 [dBA] | 61.2 | 55.0 | 53.5 | 53.5 | 52.1 | 46.5 | 45.2 | 46.1 | 46.1 | 45.6 | 46.8 | 45.9 | 43.9 | 39.1 | 36.4 | 47.1 | 40.1 | 39.9 | 35.2 | 50.2 | 40.7 |
| LwA to environment at point 4 [dBA] | 55.4 | 47.7 | 47.7 | 47.2 | 46.4 | 42.0 | 39.4 | 40.7 | 41.3 | 41.2 | 43.8 | 44.0 | 41.5 | 33.8 | 29.0 | 26.8 | 23.9 | 25.2 | 24.9 | 44.4 | 34.8 |

| Point | Total power of the unit [W] | Total sound pressure level at 3 m (1 m) [dBA] |
|---|---|---|
| **1** | 170 | 34 (44) |
| **2** | 153 | – |
| **3** | 135 | 34 (44) |
| **4** | 116 | 35 (44) |
| **5** | 95 | 28 (37) |
| **6** | 86 | – |

| Point | Total power of the unit [W] | Total sound pressure level at 3 m (1 m) [dBA] |
|---|---|---|
| **7** | 80 | – |
| **8** | 68 | – |
| **9** | 25 | 17 (26) |
| **10** | 24 | – |
| **11** | 24 | – |
| **12** | 22 | – |

| Parameters | CIVIC EC DB 1000 S21 V.2 |
|---|---|
| **Voltage [V / 50 (60) Hz]** | 1~ 230 |
| **Max. power consumption [W]** | 267 |
| **Max. current [A]** | 1.85 |
| **Maximum air flow [m³/h (l/s)]** | 1000 (278) |
| **Sound pressure level at 1 m [dBA]** | 34 |
| **Sound pressure level at 3 m [dBA]** | 24 |
| **Max. transported air temperature [°C]** | –25...+40 |
| **Casing material** | polymer coated steel |
| **Insulation** | 45 mm, EPDM (polyurethane foam) |
| **Extract filter** | ISO Coarse >60 % (G4) |
| **Supply filter** | ISO ePM1 60 % (F7) |
| **Connected air duct diameter [mm]** | 315 |
| **Weight [kg]** | 252 |
| **Temperature exchange efficiency (heating) [%]** | 70...83 |
| **Temperature exchange efficiency (cooling) [%]** | 68...81 |
| **Enthalpy exchange efficiency (heating) [%]** | 66...80 |
| **Enthalpy exchange efficiency (cooling) [%]** | 65...80 |
| **Heat exchanger type** | counter–flow |
| **Heat exchanger material** | enthalpic membrane |

| Sound-power level, A - weighted | Total | Octave frequency band [Hz] | | | | | | | | LpA 3 m | LpA 1 m |
|---|---|---|---|---|---|---|---|---|---|---|---|
| | | 63 | 125 | 250 | 500 | 1000 | 2000 | 4000 | 8000 | | |
| LwA to environment at point 1 [dBA] | **45** | 31 | 37 | 40 | 37 | 36 | 36 | 29 | 18 | **24** | **34** |
| LwA to environment at point 5 [dBA] | **37** | 26 | 29 | 32 | 29 | 29 | 29 | 24 | 15 | **17** | **27** |
| LwA to environment at point 9 [dBA] | **32** | 21 | 26 | 20 | 25 | 19 | 20 | 25 | 18 | **11** | **21** |

| Point | Total power of the unit [W] | Total sound pressure level at 3 m (1 m) [dBA] |
|---|---|---|
| **1** | 260 | 24 (34) |
| **2** | 251 | 23 (33) |
| **3** | 235 | 23 (33) |
| **4** | 221 | 22 (32) |
| **5** | 136 | 17 (27) |
| **6** | 130 | 17 (27) |

| Point | Total power of the unit [W] | Total sound pressure level at 3 m (1 m) [dBA] |
|---|---|---|
| **7** | 125 | 16 (27) |
| **8** | 120 | 16 (27) |
| **9** | 47 | 11 (21) |
| **10** | 45 | 11 (21) |
| **11** | 44 | 11 (21) |
| **12** | 42 | 11 (21) |

### CIVIC EC DB 300-E V.2

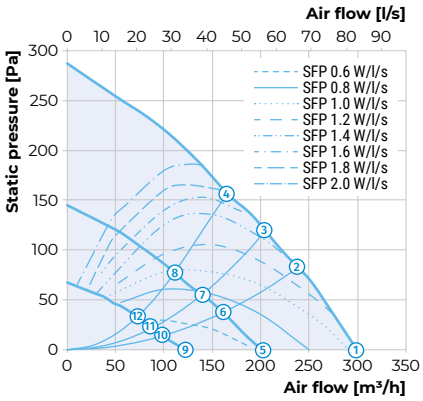


### CIVIC EC DB 500-E V.2

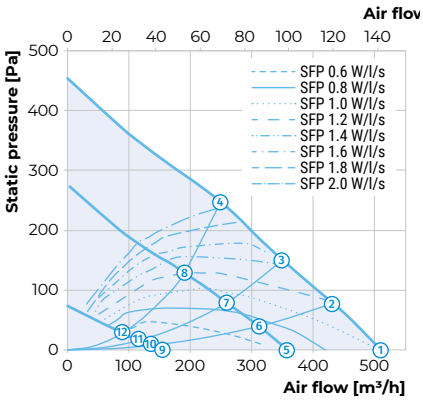


### CIVIC EC DB 1000 V.2

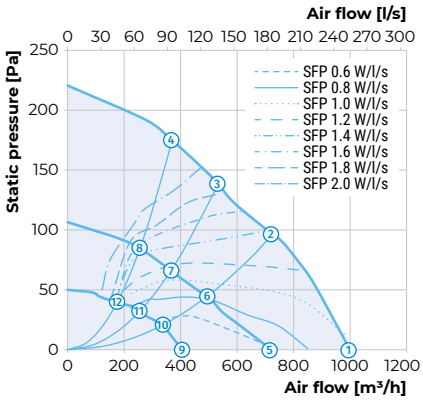


### Fresh air flow distance for CIVIC EC DB 300-E V.2

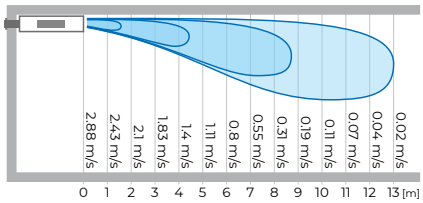


### Fresh air flow distance for CIVIC EC DB 500-E V.2

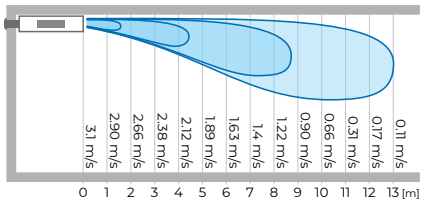


### Fresh air flow distance for CIVIC EC DB 1000 V.2

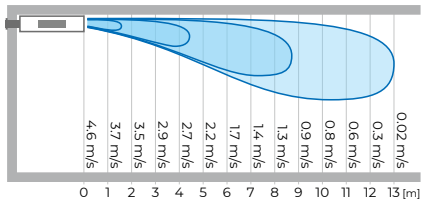


The unit is rated for indoor application with the ambient temperature ranging from +1 °C to +40 °C and relative humidity up to 80 %

## Dimensions [mm]

| Model | Ø D | H | H1 | H2 | L | L1 | L2 | L3 | L4 | W | W1 | W2 | W3 |
|---|---|---|---|---|---|---|---|---|---|---|---|---|---|
| CIVIC EC DB... 300-E S21 V.2 | 200 | 402 | 202 | 41 | 1200 | 867 | 166 | 1122 | 445 | 850 | 181 | 530 | 207 |
| CIVIC EC D1B... 300-E S21 V.2 | 200 | 402 | 450 | 45 | 1200 | 764 | 218 | 1122 | 445 | 1139 | 181 | 530 | 281 |
| CIVIC EC DB... 500-E S21 V.2 | 250 | 458 | 221 | 41 | 1500 | 1135 | 186 | 1422 | 504 | 850 | 181 | 530 | 207 |
| CIVIC EC D1B... 500-E S21 V.2 | 250 | 458 | 509 | 45 | 1500 | 964 | 268 | 1422 | 504 | 1186 | 181 | 530 | 304 |

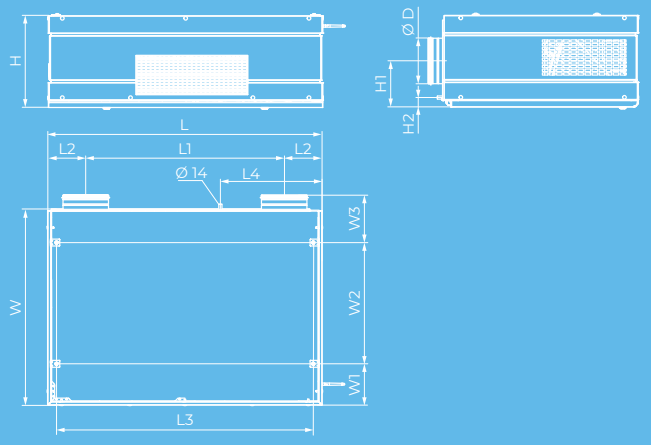


CIVIC EC DB 300-E S21 V.2 / CIVIC EC DB 500-E S21 V.2

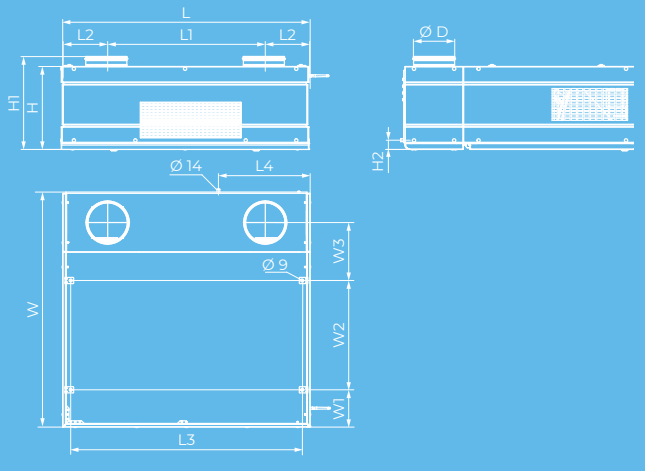


CIVIC EC D1B 300-E S21 V.2 / CIVIC EC D1B 500-E S21 V.2

## Dimensions [mm]

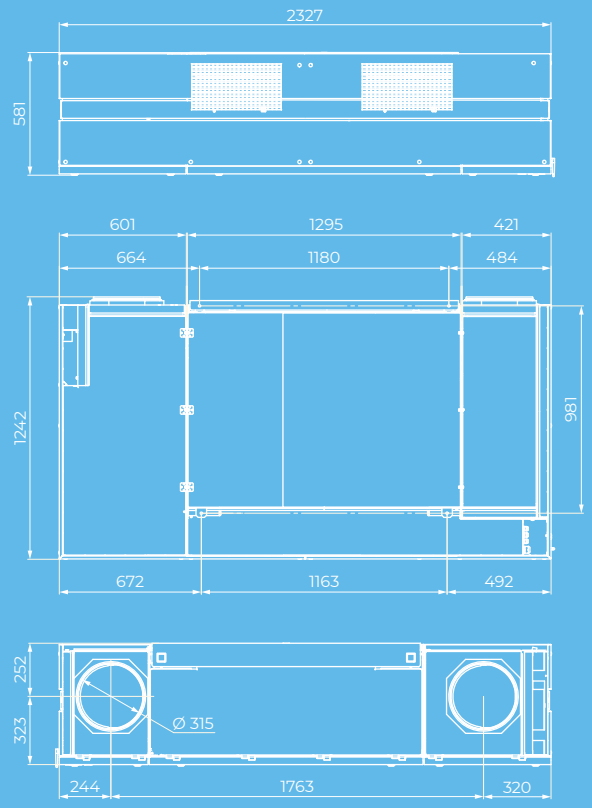


CIVIC EC DB 1000 S21 V.2

## Mounting example



**Air ducts can be taken out through the windows**

## Accessories

| | | CIVIC EC DB 300-E S21 V.2 | CIVIC EC DB 500-E S21 V.2 | CIVIC EC DB 1000 S21 V.2 |
|---|---|---|---|---|
| **Extract filter ISO Coarse >60 % (G4)** |  | FP 320x373x48 G4 | FP 379x334x48 G4 | FP 654x480x48 G4 |
| **Supply filter ISO ePM1 60 % (F7)** |  | FP 320x211x48 F7 | FP 379x254x48 F7 | FP 654x480x48 F7 |
| **Outer grill** |  | VDA 200 CFn Al | VDA 250 CFn Al | VDA 315 CFn Al |
| **Control panel** |  | S22 | S22 | S22 |

| | | CIVIC EC DB 300-E S21 V.2 | CIVIC EC DB 500-E S21 V.2 | CIVIC EC DB 1000 S21 V.2 |
|---|---|---|---|---|
| **Wi-Fi control panel** |  | S22 Wi-Fi | S22 Wi-Fi | S22 Wi-Fi |
| **LCD Control panel** |  | S25 | S25 | S25 |
| **VOC sensor** |  | DPWQ30600 | DPWQ30600 | DPWQ30600 |
| **$CO_2$ sensor** |  | DPWQ40200 | DPWQ40200 | DPWQ40200 |
| **$CO_2$ sensor with indication** |  | CD-1 | CD-1 | CD-1 |
| **$CO_2$ sensor** |  | CD-2 | CD-2 | CD-2 |
| **$CO_2$ sensor** |  | CD-3 | CD-3 | CD-3 |
| **Humidity sensor** |  | DPWC11200 | DPWC11200 | DPWC11200 |
| **Internal humidity sensor** |  | FS2 | FS2 | FS2 |
| **Humidity sensor** |  | HR-S | HR-S | HR-S |
| **Syphon kit** |  | SFK 20x32 | SFK 20x32 | SFK 20x32 |
| **Drain pump** |  | CP-2 | CP-2 | CP-2 |
| **Modul of vertical duct connection** | 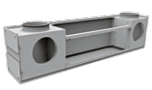 | VDC Civic 300 DB | VDC Civic 500 DB | VDC Civic 1000 DB |



# FRESHBOX 100 ERV

## DECENTRALIZED SUPPLY AND EXHAUST UNIT WITH HEAT AND ENERGY RECOVERY

**100** m³/h

from **13** dBA

up to **98** %

EC motor



## FEATURES

- Efficient solution for supply and exhaust ventilation of enclosed spaces.
- Units with enthalpy heat exchangers are available for use in hot and wet climates.
- Low-energy EC motors.
- Supply air purification ensured by two built-in G4 and F8 filters (optionally F8 C and H13).
- Silent operation.
- Upgradeable with an exhaust duct to provide air extraction from the bathroom.
- Easy installation.
- Compact size.
- Air ducts can be taken out through the windows.

## Design

Polymer coated metal casing decorated with an acrylic front panel. Heat and noise insulation is ensured by a layer of 10 mm cellular synthetic rubber.

The front panel provides convenient access for filter maintenance and has a lock for extra security.

The unit has two Ø 100 mm pipes for fresh air intake and stale air extraction outside. The third Ø 100 mm pipe (included in the scope of delivery) can be additionally fitted to the unit to connect the exhaust air duct from the bathroom.

## Motors

The units feature efficient electronically commutated (EC) motors with an external rotor and impellers with forward curved blades. These state-of-the-art motors are the most advanced solution in energy efficiency today.

EC motors are characterised with high performance and optimum control across the entire speed range. In addition to that the efficiency of electronically commutated motors reaches very impressive levels of up to 90 %.

# Design

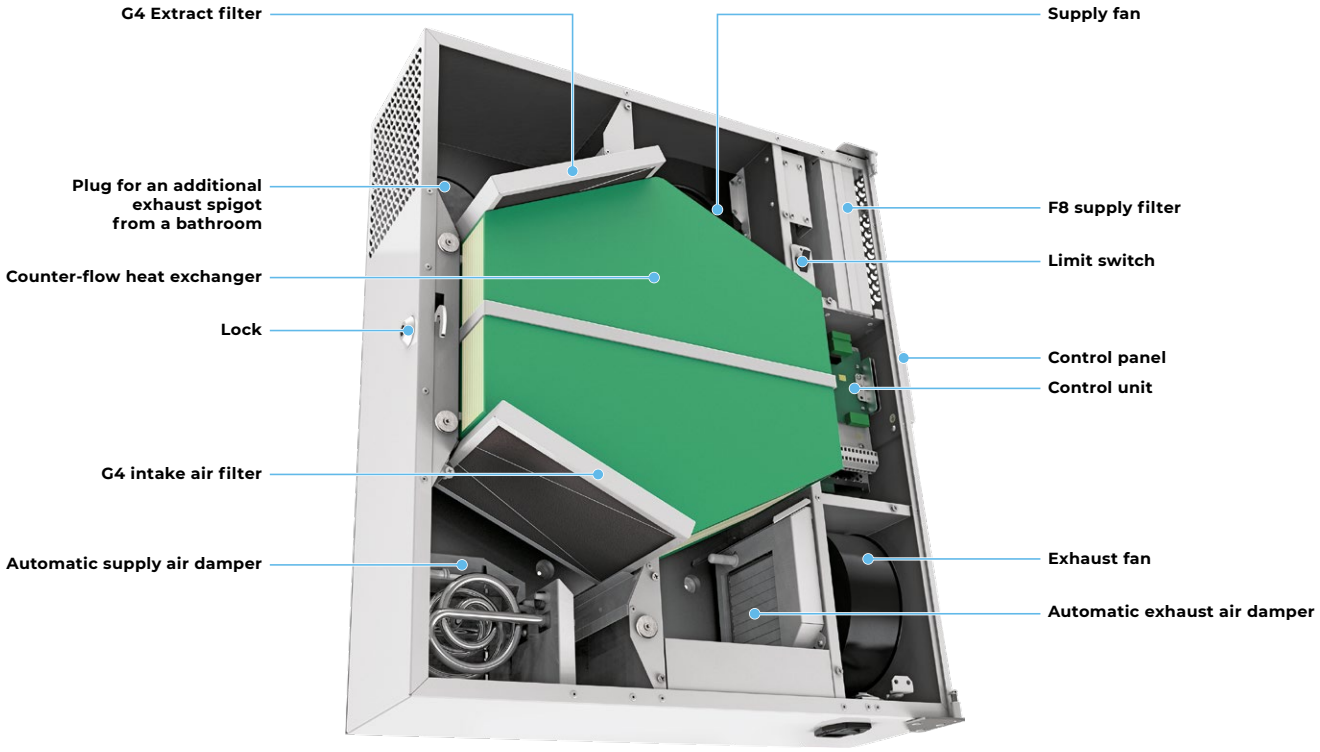


## Air filtration

Supply air cleaning is provided by the G4 and F8 panel filters (PM2.5 > 75 %). To meet more stringent air purity requirements the F8 filter can be replaced with an H13 (PM2.5 > 99 %) (purchased separately). Exhaust air is cleaned by the panel filter G4.

## Control

The unit is equipped with a control panel.

The remote control is supplied as standard.

| Functions | Freshbox 100 |
|---|---|
| **Speed changeover** | • |
| **Filter replacement indication** | • |
| **Alarm indication** | • |
| **Speed setting** | • |
| **Timer** | • |
| **Weekly schedule** | • |

## Air dampers

The unit is equipped with supply and exhaust air dampers which activate automatically to prevent drafts while the unit is off.

## Heat exchanger




The **Freshbox 100 ERV** units are equipped with a counter-flow heat exchanger with an enthalpy membrane at the core.

- In the cold season the exhaust air heat and moisture are transferred to the supply air stream through the enthalpy membrane reducing the heat losses through ventilation.
- In warm season the heat and humidity of the outdoor air is absorbed by extract air flow through the enthalpy membrane. This way the supply air temperature and humidity decreases and heat recovery reduces operation loads for the air conditioner.

# Operating principle

The cold outdoor air passes through the filters and the heat exchanger and then is delivered to the serviced space by the supply centrifugal fan.

Warm polluted air from the premise flows through the filter and the heat exchanger and is exhausted outside with an extract centrifugal fan through an air duct in the wall.

The supply and exhaust air flows are fully separated which helps eliminate the possibility of odour or microbial transfer between the streams.

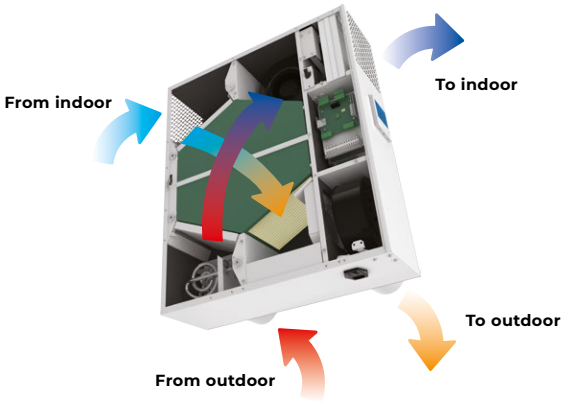


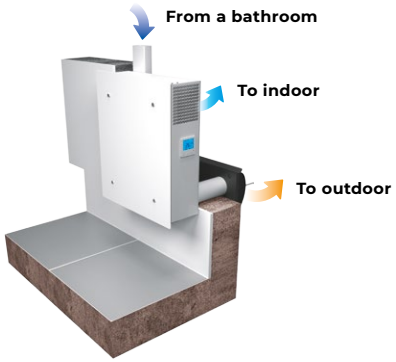


**Operating principle with extra spigot for bathroom exhaust ventilation**

# Technical data

| Parameters | Freshbox 100 ERV | | |
|---|---|---|---|
| **Speed** | 1 | 2 | 3 |
| **Voltage [V / 50-60 Hz]** | 1~ 110–240 | | |
| **Max. unit power [W]** | 12 | 21 | 45 |
| **Max. unit current [A]** | 0.4 | | |
| **Maximum air flow [m³/h (l/s)]** | 30 (8) | 60 (17) | 100 (28) |
| **RPM [min$^{-1}$]** | 2200 | | |
| **Sound pressure level at 3 m distance [dBA]** | 13 | 27 | 39 |
| **Max. operating temperature [°C]** | -20...+40 | | |
| **Case material** | polymer coated steel | | |
| **Insulation [mm]** | 10 | | |
| **Extract filter** | G4 | | |
| **Supply filter** | G4, F8 (Option: F8 C, H13) | | |
| **Connected air duct diameter [mm]** | 100 | | |
| **Weight [kg]** | 31 | | |
| **Temperature exchange efficiency (heating) [%]** | 83...96 | | |
| **Temperature exchange efficiency (cooling) [%]** | 73...89 | | |
| **Enthalpy exchange efficiency (heating) [%]** | 73...85 | | |
| **Enthalpy exchange efficiency (cooling) [%]** | 70...85 | | |
| **Heat exchanger type** | counter-flow | | |
| **Heat exchanger material** | enthalpic membrane | | |

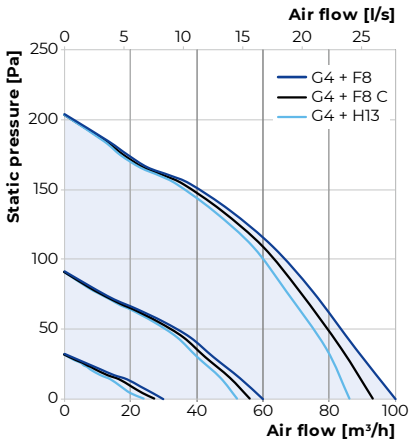


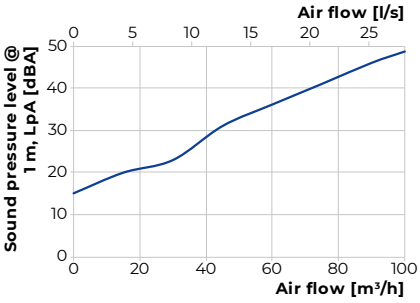


| Sound-power level, A - weighted | Total | Octave frequency band [Hz] | | | | | | | | LpA 3 m | LpA 1 m |
|---|---|---|---|---|---|---|---|---|---|---|---|
| | | 63 | 125 | 250 | 500 | 1000 | 2000 | 4000 | 8000 | | |
| **LwA to environment [dBA]** | 49 | 45 | 40 | 44 | 38 | 33 | 29 | 27 | 22 | 28 | 38 |

## Dimensions [mm]

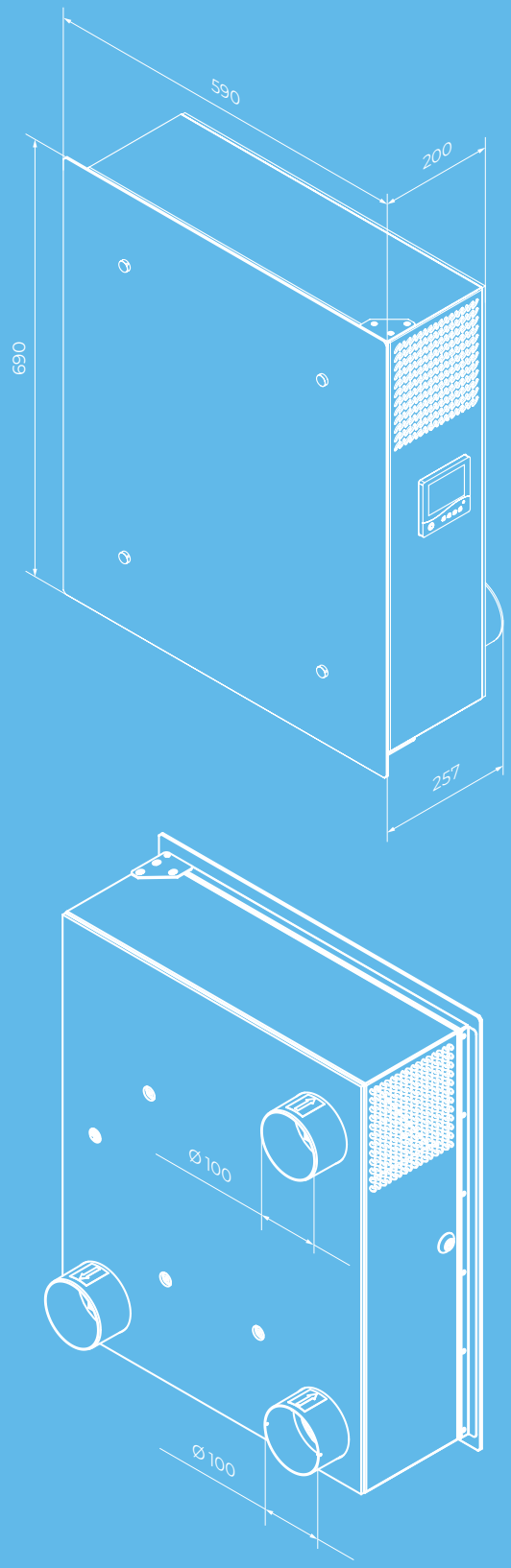


## Mounting example

Each space requiring ventilation is equipped with one or several **Freshbox 100 ERV** units.

A single unit is capable to ensure efficient ventilation in spaces with floor area up to 75 m².

**Freshbox 100 ERV** units can be upgraded with a bathroom exhaust air duct. To enable such a configuration the units can be additionally equipped with the optional Ø 100 mm spigot (supplied as standard).

**Freshbox 100 ERV deployment in a compact residential space**

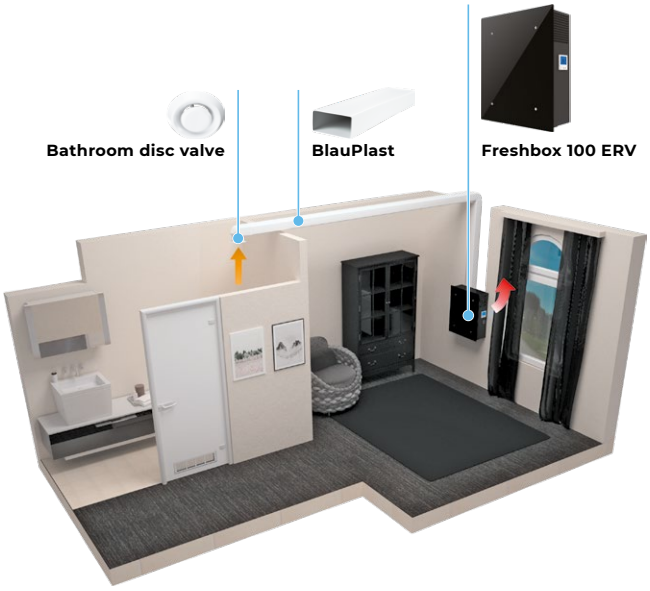


**Freshbox 100 ERV mounting example in the office**

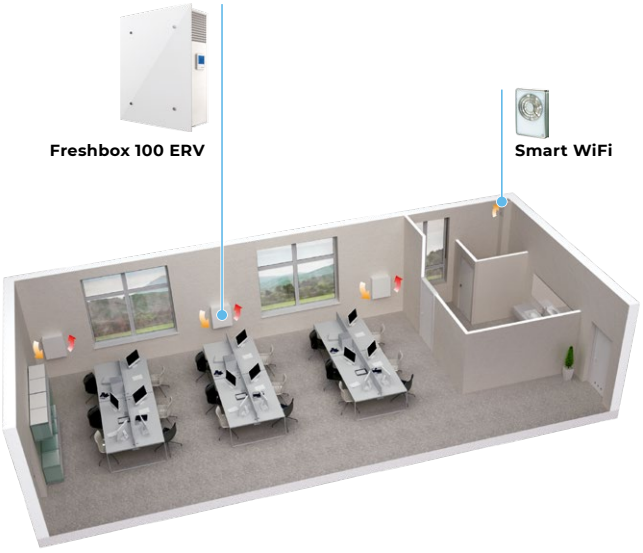

# Accessories

| Name | | Description |
|---|---|---|
| **MS Freshbox 100 chrome** |  | **Mounting kit:**<br>· Two Ø 100 mm air ducts, 500 mm long<br>· Ventilation outer hood made of polished steel<br>· Cardboard template |
| **MS Freshbox 100 white** |  | **Mounting kit:**<br>· Two Ø 100 mm air ducts, 500 mm long<br>· Ventilation outer hood, painted white<br>· Cardboard- template |
| **AH Freshbox 100 chrome** |  | Ventilation outer hood made of polished steel |
| **AH Freshbox 100 white** |  | Ventilation outer hood, painted white |
| **FP 193x158x18 G4 PPI** |  | G4 filter |
| **FP 193x158x47 F8** |  | F8 filter |
| **FP 193x158x47 F8 C** |  | F8 carbon filter |
| **FP 193x158x47 H13** |  | H13 HEPA filter |
| **HR-S** |  | Humidity sensor |
| **CD-1** |  | $CO_2$ sensor with LED $CO_2$ indication and a sensor button for operation mode selection |
| **CD-2** |  | $CO_2$ sensor |



# FRESHBOX 100 ERV WI-FI

## DECENTRALIZED SUPPLY AND EXHAUST UNIT WITH HEAT AND ENERGY RECOVERY



**100** m³/h

from **13** dBA

up to **98** %

EC motor

Wi Fi READY

Hey Google

## FEATURES

- Efficient solution for supply and exhaust ventilation of enclosed spaces.
- Heat exchanger with an enthalpy membrane modification available for humid and hot climate conditions.
- Low-energy EC motors.
- Upgradeable with an exhaust duct to provide air extraction from the bathroom.
- Silent operation.
- Easy installation.
- Compact size.
- Controlled by Android or iOS smartphone or tablet over Wi-Fi.
- Air ducts can be taken out through the windows.

## Design

Polymer coated metal casing decorated with an acrylic front panel. Heat and noise insulation is ensured by a layer of 10 mm cellular synthetic rubber.

The front panel provides convenient access for filter maintenance and has a lock for extra security.

The unit has two Ø 100 mm pipes for fresh air intake and stale air extraction outside. The third Ø 100 mm pipe (included in the scope of delivery) can be additionally fitted to the unit to connect the exhaust air duct from the bathroom.

## Motors

The units feature efficient electronically commutated (EC) motors with an external rotor and impellers with forward curved blades. These state-of-the-art motors are the most advanced solution in energy efficiency today.

EC motors are characterised with high performance and optimum control across the entire speed range. In addition to that the efficiency of electronically commutated motors reaches very impressive levels of up to 90 %.

## Design

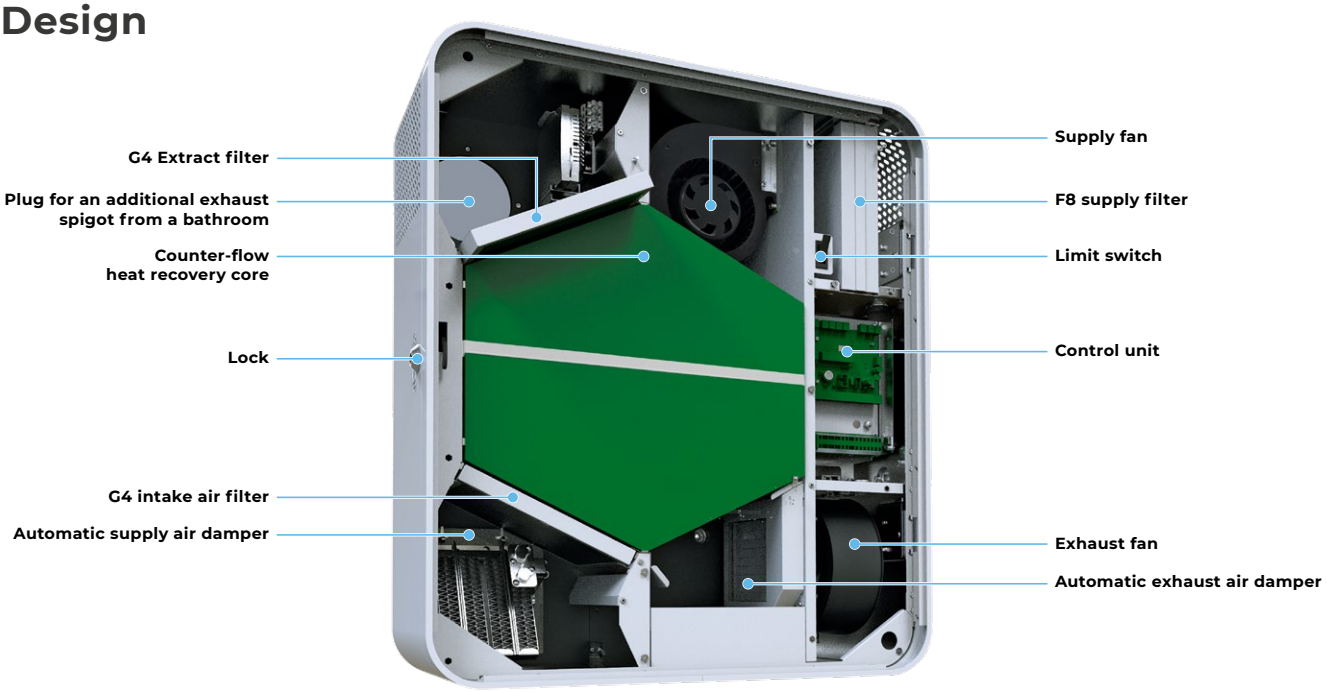


## Air dampers

The unit is equipped with supply and exhaust air dampers which activate automatically to prevent drafts while the unit is off.

## Air filtration

Supply air cleaning is provided by the G4 and F8 filters. To meet more stringent air purity requirements the F8 filter can be replaced with an H13 or F8 carbon filter (purchased separately). Exhaust air is cleaned by the filter G4.

## Heat exchanger




The **Freshbox 100 ERV WiFi** units are equipped with a counter-flow energy recovery core with an enthalpy membrane at the core.

- In warm season the heat and humidity of the outdoor air is absorbed by extract air flow through the enthalpy membrane. This way the supply air temperature and humidity decreases and heat recovery reduces operation loads for the air conditioner.

## Operating principle

The supply and exhaust air flows are fully separated which helps eliminate the possibility of odour or microbial transfer between the streams.

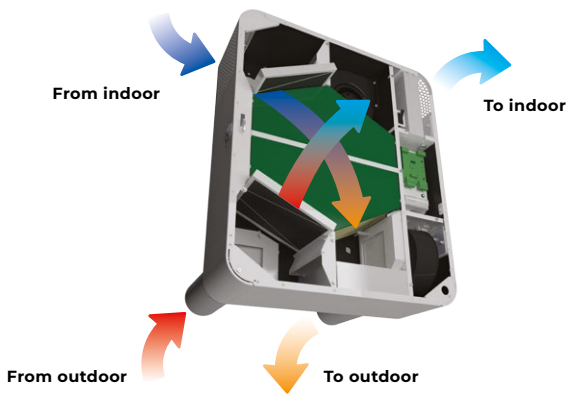


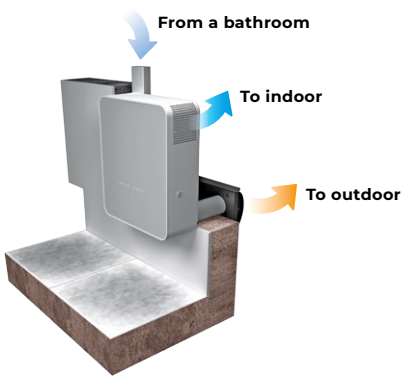


**Operating principle with extra spigot for bathroom exhaust ventilation**

# Control

The unit is equipped with a control panel.

The remote control is supplied as standard

Wi-Fi communication.



## AUTOMATIC FUNCTIONS

| | Freshbox 100 WiFi |
|---|---|
| **Speed selection** | • |
| **Filter replacement indication** | • |
| **Alarm indication** | • |
| **Speed setup** | • |
| **Timer** | • |
| **Week scheduler** | • |
| **Supply air temperature setup** | |
| **Control with the mobile application Android / iOS** | • |

## REMOTE CONTROL

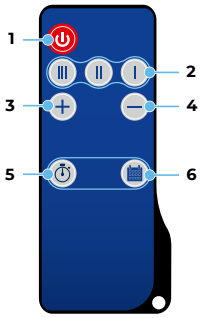


**1** Turning unit on/off
**2** Speed selection (Min/Mid/Max)
**3** Increasing temperature set point for the reheater (available for the models with a reheater)
**4** Decreasing temperature set point for the reheater (available for the models with a reheater)
**5** Turning timer on/off
**6** Activation/deactivation of the scheduled operation mode

## CONTROL PANEL

- ON/OFF button
- Speed changeover (down)
- Speed changeover (up)
- Weekly schedule
- Connection to WiFi
- Filter replacement indication
- Alarm indication

# Technical data

| Parameters | Freshbox 100 ERV WiFi | | | | |
|---|---|---|---|---|---|
| **Speed** | I | II | III | IV | V |
| **Voltage [V / 50 (60) Hz]** | 1~ 110–240 | | | | |
| **Max. power [W]** | 20 | 23 | 29 | 37 | 53 |
| **Max. current consumption [A]** | 0.4 | | | | |
| **Maximum air flow [m³/h (l/s)]** | 30 (8) | 44 (12) | 60 (17) | 75 (21) | 100 (28) |
| **RPM [min⁻¹]** | max 2200 | | | | |
| **Sound pressure level at 3 m [dBA]** | 13 | 20 | 27 | 33 | 39 |
| **Transported air temperature [°C]** | –20...+40 | | | | |
| **Casing material** | polymer coated steel | | | | |
| **Insulation thickness [mm]** | 10 | | | | |
| **Extract filter** | G4 | | | | |
| **Supply filter** | G4 + F8 (Option: F8 Carbon; H13) | | | | |
| **Connected air duct diameter [mm]** | 100 | | | | |
| **Weight [kg]** | 31 | | | | |
| **Temperature exchange efficiency (heating) [%]** | 83...96 | | | | |
| **Temperature exchange efficiency (cooling) [%]** | 73...89 | | | | |
| **Enthalpy exchange efficiency (heating) [%]** | 73...85 | | | | |
| **Enthalpy exchange efficiency (cooling) [%]** | 70...85 | | | | |
| **Heat recovery core type** | counter-flow | | | | |
| **Heat exchanger material** | enthalpic membrane | | | | |

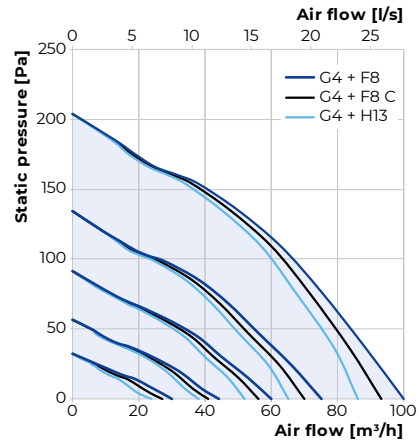


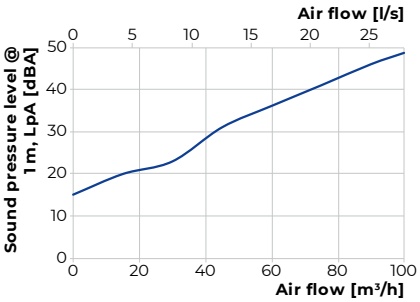


| Sound-power level, A - weighted | Total | Octave frequency band [Hz] 63 | 125 | 250 | 500 | 1000 | 2000 | 4000 | 8000 | LpA 3 m | LpA 1 m |
|---|---|---|---|---|---|---|---|---|---|---|---|
| **LwA to environment [dBA]** | 49 | 45 | 40 | 44 | 38 | 33 | 29 | 27 | 22 | 28 | 38 |

## Dimensions [mm]

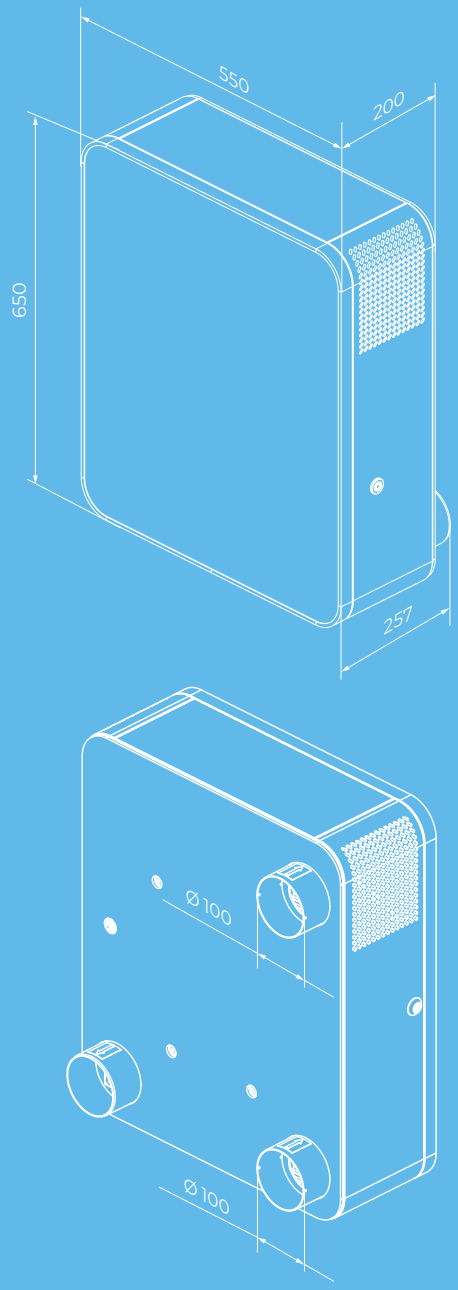


Download the Blauberg Home app for Android

Download the Blauberg Home app for iOS

## Mounting example

Each space requiring ventilation is equipped with one or several **Freshbox 100 ERV WiFi** units.

A single unit is capable to ensure efficient ventilation in spaces with floor area up to 75 m².

**Freshbox 100 ERV WiFi** units can be upgraded with a bathroom exhaust air duct. To enable such a configuration the units can be additionally equipped with the optional Ø 100 mm spigot (supplied as standard).

**Freshbox 100 ERV WiFi deployment in a compact residential space**

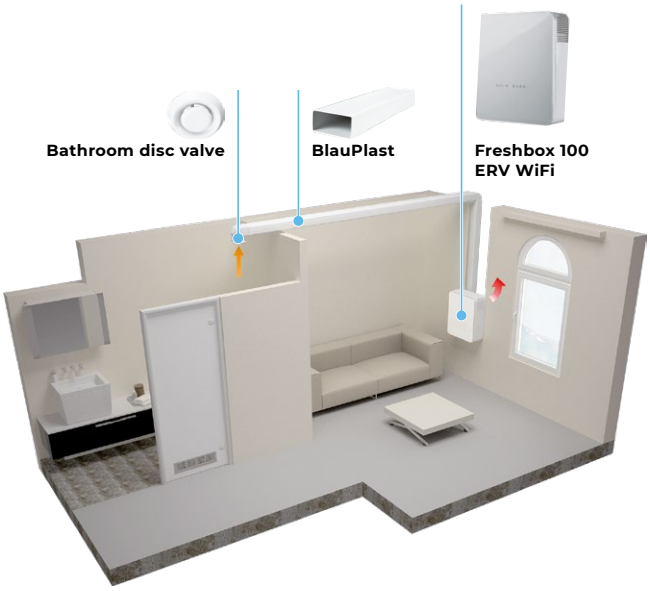


**Freshbox 100 ERV WiFi mounting example in the office**

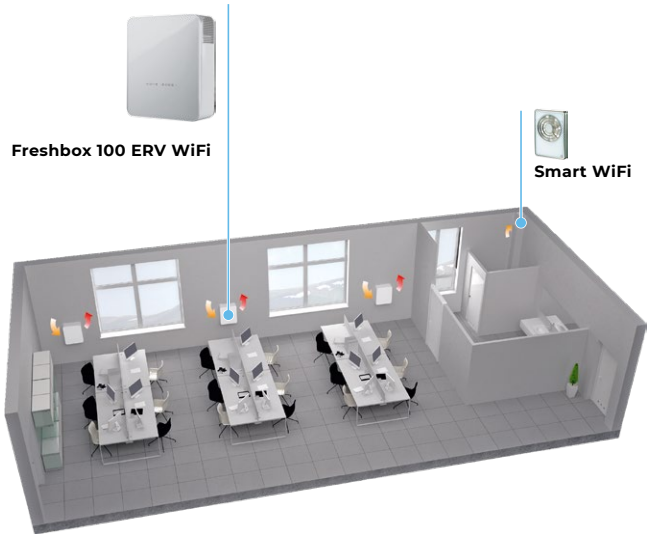

# Accessories

| Name | | Description |
|---|---|---|
| **MS Freshbox 100 chrome** |  | **Mounting kit:**<br>· Two Ø 100 mm air ducts, 500 mm long<br>· Ventilation outer hood made of polished steel<br>· Cardboard template |
| **MS Freshbox 100 white** |  | **Mounting kit:**<br>· Two Ø 100 mm air ducts, 500 mm long<br>· Ventilation outer hood, painted white<br>· Cardboard template |
| **AH Freshbox 100 chrome** |  | Ventilation outer hood made of polished steel |
| **AH Freshbox 100 white** |  | Ventilation outer hood, painted white |
| **FP 193x158x18 G4 PPI** |  | G4 panel filter |
| **FP 193x158x47 F8** |  | F8 panel filter |
| **FP 193x158x47 F8 C** |  | F8 carbon panel filter |
| **FP 193x158x47 H13** |  | H13 HEPA panel filter |
| **HR-S** |  | Humidity sensor |
| **CD-1** |  | $CO_2$ sensor with LED $CO_2$ indication and a sensor button for operation mode selection |
| **CD-2** |  | $CO_2$ sensor |



# FRESHBOX 110 ERV

## DECENTRALIZED SUPPLY AND EXHAUST UNIT WITH HEAT AND ENERGY RECOVERY

**100** m³/h

from **10** dBA

up to **93** %

EC motor



## FEATURES

- High efficiency ventilation of a single room or a small appartment.
- Flush or surface mounting option.
- Optional connection of supply and extract 75 mm semi-rigid air ducts for flush mounted Freshbox 110 K1 unit.
- Optional connection of 100 mm extract air duct for surface mounted Freshbox 110 unit.
- Low noise level from 10 dBA at 3 m.
- High level of wind protection.
- Clean air with an ISO ePM1 65% / F7 supply filter.
- Easy installation

## Designation key

| Series | Rated air flow [m³/h] | Mounting | Heat exchanger type |
|---|---|---|---|
| **Freshbox:** decentralized ventilation unit | 110 | **_:** surface mounting<br>**K1:** flush mounting | **_:** heat recovery<br>**ERV:** heat and humidity recovery |

# Design

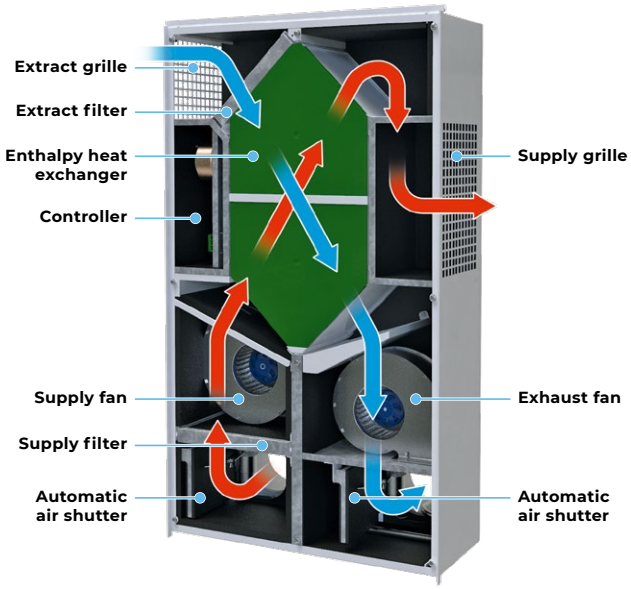


Freshbox 110 (wall surface mounting)

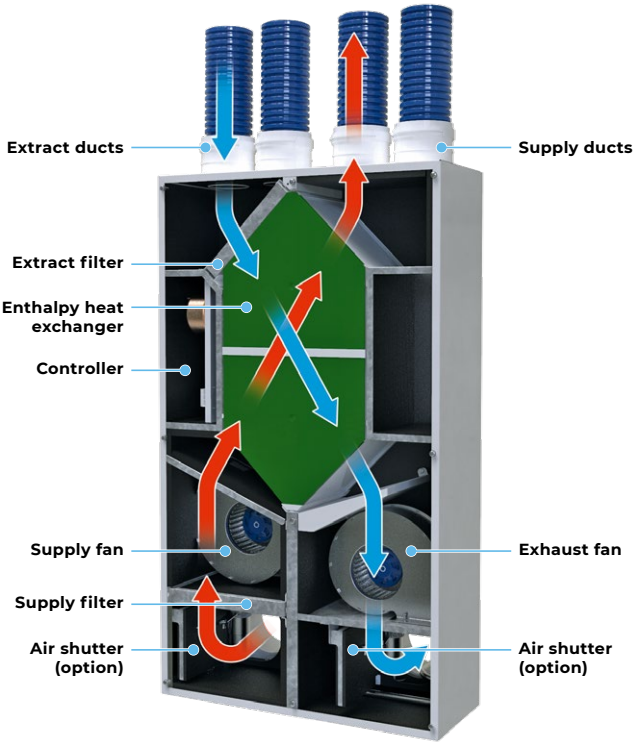


Freshbox 110 K1 (wall flush mounting)

## Casing

The casing is made of sheet metal, painted white, with a layer of heat and sound insulation. The modern design allows Freshbox 110 to fit harmoniously into any interior. The front panel opens easily for filter maintenance. The unit is equipped with two 100 mm spigots for air intake and exhaust.

## Fans

The unit is equipped with high-efficient electronically commutated (EC) motors with an external rotor equipped with impellers with forward-curved blades. Such motors are currently the most advanced solution in the field of energy saving. EC motors are characterized by high performance and optimal control over the entire range of speeds. The undoubted advantage of electronically commutated motors is high efficiency (up to 90%).

## Air filtration

Supply air is cleaned by a Coarse 90% / G4 cassette filter. An ePM1 65 % / F7 filter can be installed as an option.

Extract air purification is performed by a Coarse 90% / G4 cassette filter.

## Air dampers

An automatic supply and axhaust air dampers are provided to prevent drafts when the unit is switched off.

## Heat exchanger

**Freshbox 110 ERV** units are equipped with a heat exchanger, which is made of enthalpy membrane and transfers heat and moisture.

In the warm season, the heat and moisture of fresh intake air are transferred through the enthalpy membrane to the extract air. This allows for a considerable reduction of the supply air temperature and humidity which, in turn, reduces the air conditioning load.

## Automation and control

Control panel on the side surface of the unit.

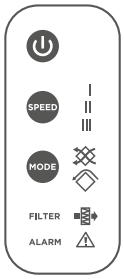


**FUNCTIONS**

- On / off
- Speed switching
- Heat recovery mode
- Summer cooling mode
- Filter maintenance indication
- Alarm indication

# Technical data

| | Freshbox 110 ERV | | | Freshbox 110 K1 ERV | | |
|---|---|---|---|---|---|---|
| **Speed** | 1 | 2 | 3 | 1 | 2 | 3 |
| **Air flow [m³/h]** | 30 | 60 | 100 | 30 | 60 | 100 |
| **Voltage [V / 50-60 Hz]** | 1~230 | | | 1~230 | | |
| **Power [W]** | 10 | 15 | 31 | 10 | 15 | 31 |
| **Max current [A]** | 0.26 | | | 0.26 | | |
| **RPM [min⁻¹]** | 3200 | | | 3200 | | |
| **Sound power level LwA to environment [dBA]** | 31 | 41 | 51 | 31 | 41 | 51 |
| **Sound pressure level LpA to environment at 1 m distance [dBA]** | 20 | 30 | 40 | 20 | 30 | 40 |
| **Sound pressure level LpA to environment at 3 m distance [dBA]** | 10 | 21 | 31 | 10 | 21 | 31 |
| **Operating temperature [°C]** | –15...+40 | | | –15...+40 | | |
| **Case material** | polymer coated steel | | | polymer coated steel, galvanized steel | | |
| **Insulation [mm]** | 10 | | | 10 | | |
| **Extract filter ISO 16890 / EN 779:2012** | Coarse 90% / G4 | | | Coarse 90% / G4 | | |
| **Supply filter ISO 16890 / EN 779:2012** | Coarse 90% / G4 Optional: ePM1 65% / F7 | | | Coarse 90% / G4 Optional: ePM1 65% / F7 | | |
| **Connected air duct diameter [mm]** | 2×100 mm + optional 1×100 mm | | | 2×100 mm + optional 4×75 mm | | |
| **Weight [kg]** | 20 | | | 23 | | |
| **Temperature recovery efficiency [%]** | 85 | 80 | 72 | 85 | 80 | 72 |
| **Heat exchanger type** | counter–flow | | | counter–flow | | |
| **Heat exchanger material** | enthalpic | | | enthalpic | | |

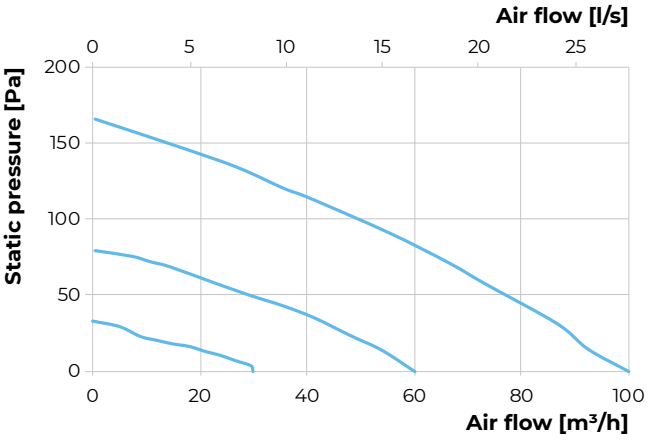


## Dimensions [mm]

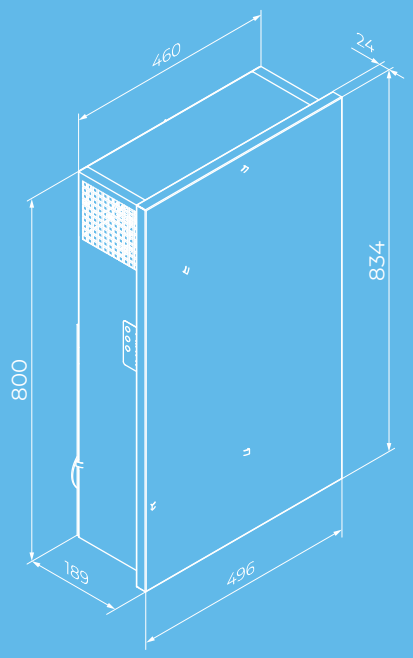


Freshbox 110 (wall surface mounting)

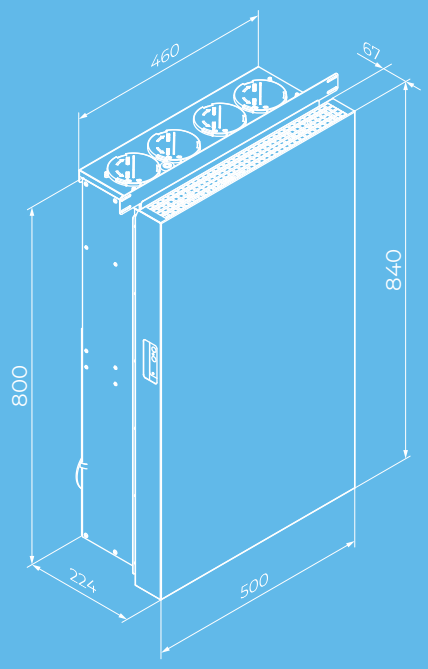


Freshbox 110 K1 (wall flush mounting)

# Mounting

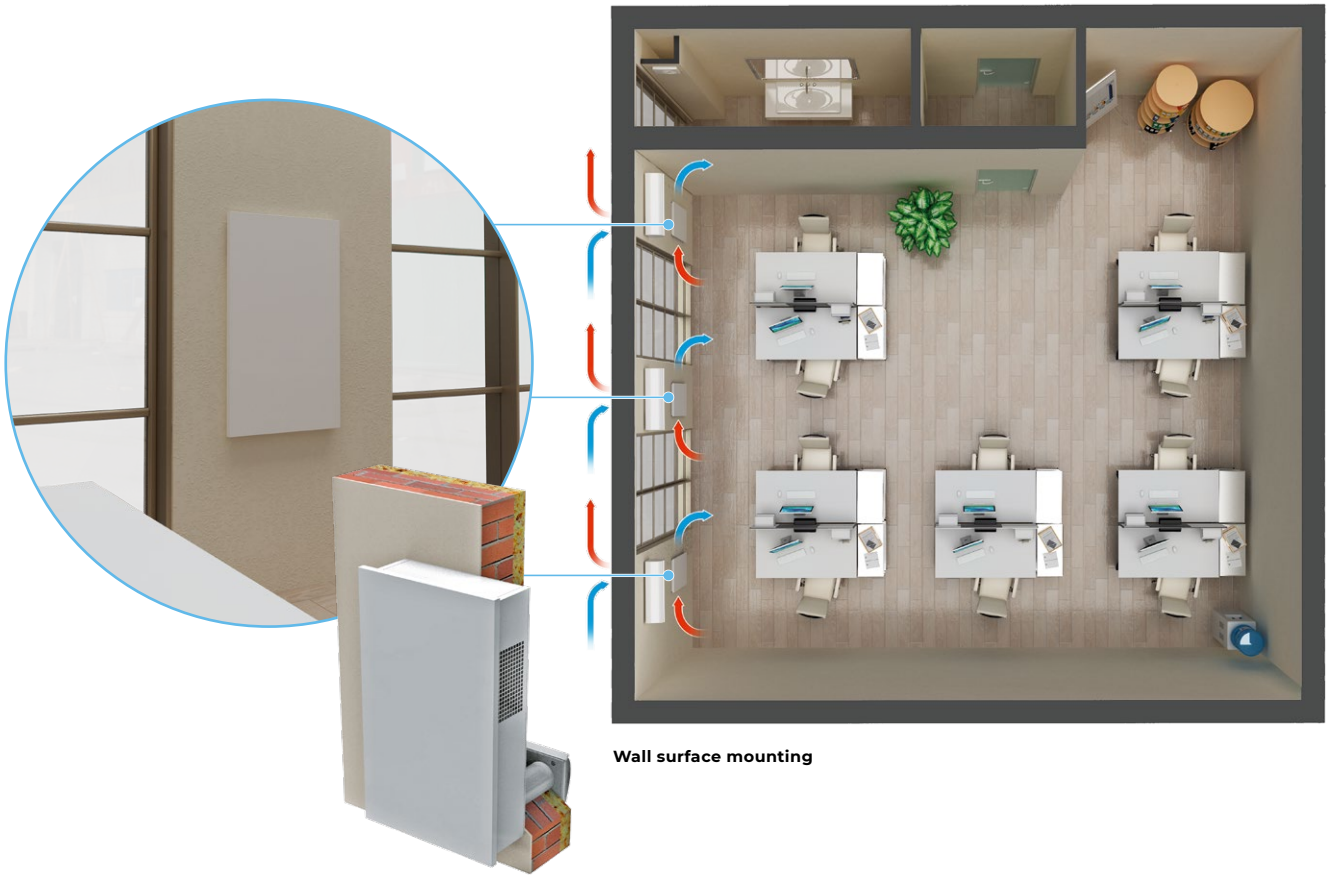

Wall surface mounting

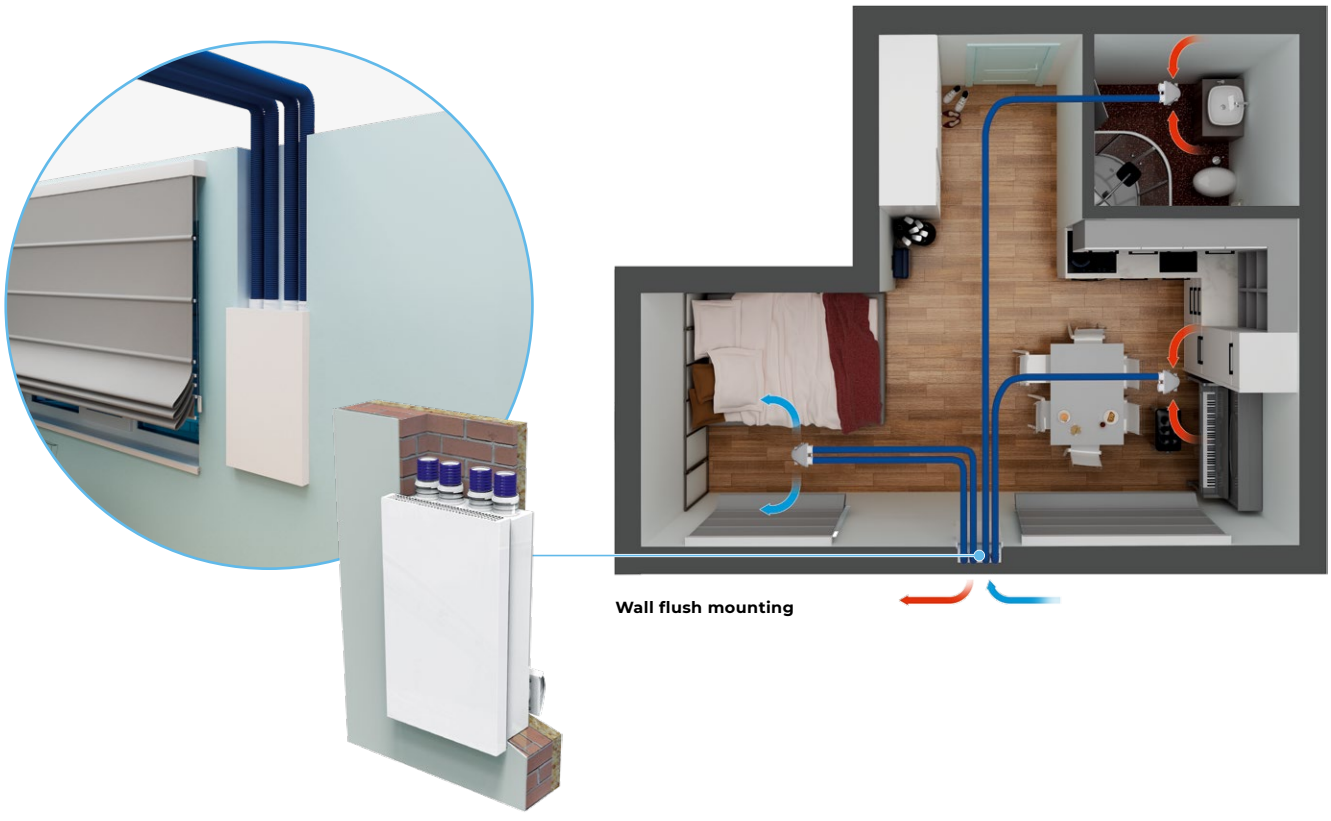

Wall flush mounting

# Accessories

| | | |
|---|---|---|
| <br>**FP 176x160x22**<br>**Coarse 90% / G4**<br>Extract filter | <br>**FP 203x150x22**<br>**Coarse 90% / G4**<br>Supply filter | <br>**FP 203x150x22**<br>**ePM1 65% / F7**<br>Supply filter option |
| <br>**MS Freshbox 110**<br>Mounting kit | <br>**MS Freshbox 110 white**<br>Mounting kit | <br>**MS Freshbox 110 chrome**<br>Mounting kit |
| 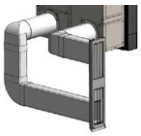<br>**MS1 Freshbox 110**<br>Mounting kit for corner mounting of the grille in the window opening | 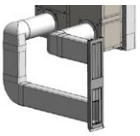<br>**MS1 Freshbox 110 white**<br>Mounting kit for corner mounting of the grille in the window opening | 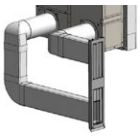<br>**MS1 Freshbox 110 chrome**<br>Mounting kit for corner mounting of the grille in the window opening |
| <br>**AH Freshbox 110**<br>Supply and exhaust hood | <br>**AH Freshbox 110 white**<br>Supply and exhaust hood | <br>**AH Freshbox 110 chrome**<br>Supply and exhaust hood |
| <br>**CD-1**<br>$CO_2$ sensor | <br>**CD-2**<br>$CO_2$ sensor | <br>**CD-3**<br>$CO_2$ sensor |
| <br>**HR-S**<br>Humidity sensor | <br>**RKF 75 kit**<br>Air ducts with lock rings (4 pcs.) | |



# FRESHBOX 200 ERV WI-FI

## DECENTRALIZED SUPPLY AND EXHAUST UNIT WITH HEAT AND ENERGY RECOVERY



**200** m³/h

from **12** dBA

up to **85** %

EC motor

Wi Fi READY

Hey Google

## FEATURES

- Efficient solution for supply and exhaust ventilation of enclosed spaces.
- EC fans with low energy consumption.
- Supply air cleaning is provided by the G4 and F7 filters. Additional air purification due to recirculation. H13 filter is available as an option.
- Easy installation.
- Upgradeable with an exhaust duct to provide air extraction from the bathroom.
- Compact size.
- Controlled by Android or iOS smartphone or tablet over Wi-Fi.
- Air ducts can be taken out through the windows.

## Design

The casing is made of polymer coated steel plates.

The front panel provides convenient access for filter maintenance and has a lock for extra security.

The unit has two Ø 100 mm pipes for fresh air intake and stale air extraction outside. The third Ø 100 mm pipe (included in the scope of delivery) can be additionally fitted to the unit to connect the exhaust air duct from the bathroom.

## Motors

The units feature efficient electronically commutated (EC) motors with an external rotor and impellers with forward curved blades. These state-of-the-art motors are the most advanced solution in energy efficiency today.

EC motors are characterised with high performance and optimum control across the entire speed range. In addition to that the efficiency of electronically commutated motors reaches very impressive levels of up to 90 %.

# Design

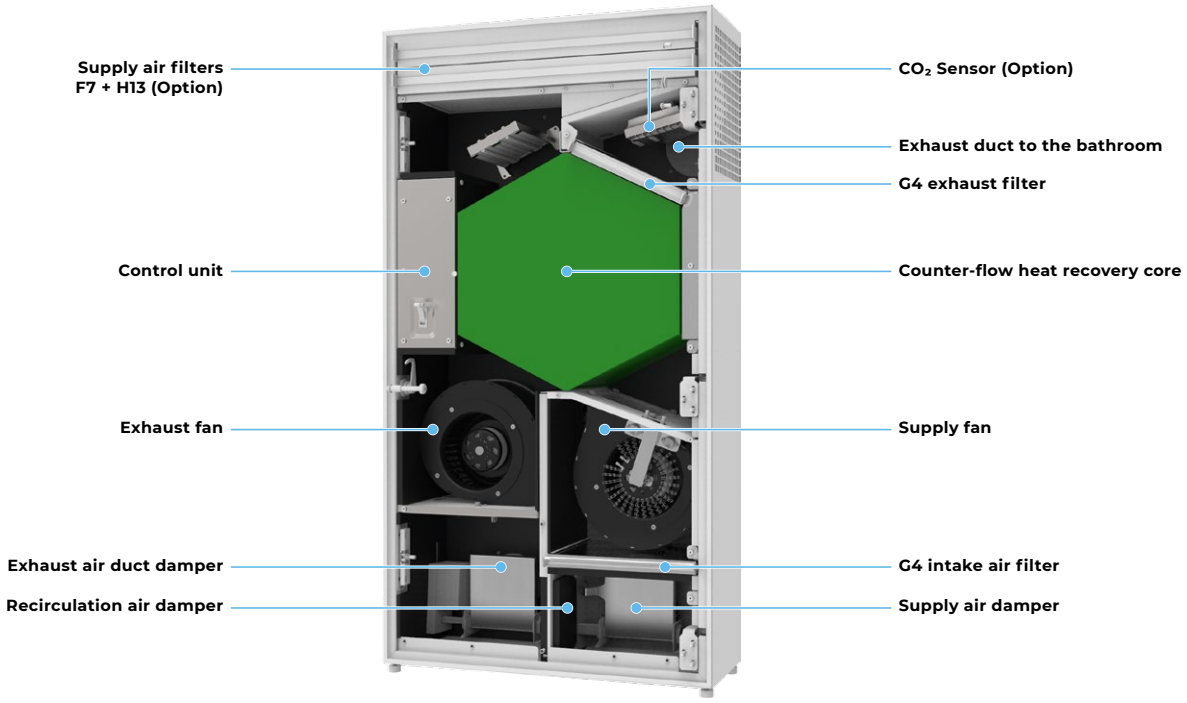


## Air dampers

The unit is equipped with supply and exhaust air dampers which activate automatically to prevent drafts while the unit is off.

## Air filtration

Supply air cleaning is provided by the G4 and F7 filters. To meet more stringent air purity requirements the F7 filter can be replaced with an H13 Filter (purchased separately).

Exhaust air is cleaned by the panel filter G4.

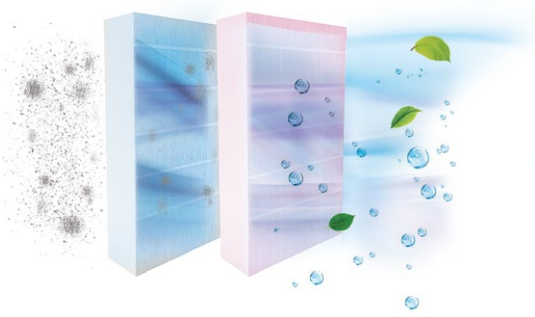

## Heat and energy recovery




The unit is equipped with a counter-flow energy recovery core with an enthalpy membrane at the core.

- **In the cold season** the exhaust air heat and moisture are transferred to the supply air stream through the enthalpy membrane reducing the heat losses through ventilation.
- Consequently, it is the intake air heat and moisture transferred to the extract air stream through the enthalpy membrane **in the warm season**. This allows for a considerable reduction of the supply air temperature and humidity which, in turn, reduces the air conditioning load.

Download the Blauberg Home app for Android

Download the Blauberg Home app for iOS

# Operating principle

The supply and exhaust air flows are fully separated which helps eliminate the possibility of odour or microbial transfer between the streams.

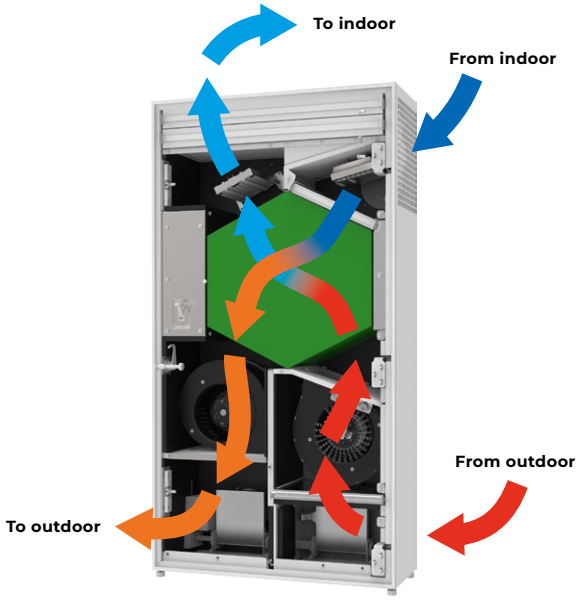


### RECIRCULATION OPERATION MODE

The supply and exhaust air dampers are closed, the recirculation damper is open. The room air circulates through the filters. Then it is returned back to the room purified.

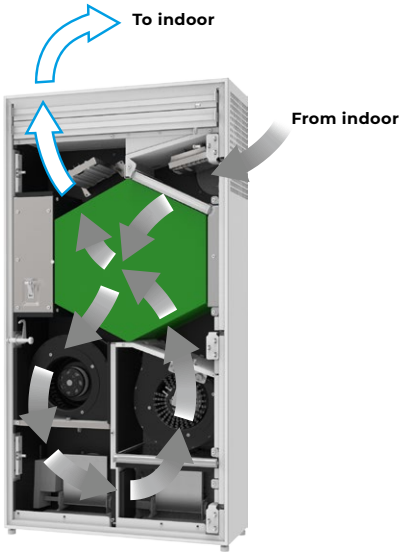


# Control

The unit is equipped with a control panel.

The remote control is supplied as standard

Wi-Fi communication.



### AUTOMATIC FUNCTIONS

| | Freshbox 200 ERV WiFi<br>Freshbox E-200 ERV WiFi |
|---|---|
| **Speed selection** | • |
| **Filter replacement indication** | • |
| **Alarm indication** | • |
| **Speed setup** | • |
| **Timer** | • |
| **Week scheduler** | • |
| **Control with the mobile application Android / iOS** | • |

### REMOTE CONTROL

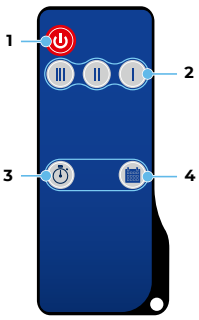


**1** Turning unit on/off
**2** Speed selection (Min/Mid/Max)
**3** Turning timer on/off
**4** Activation/deactivation of the scheduled operation mode

### CONTROL PANEL

ON/OFF button

Speed changeover (down)

Speed changeover (up)

Weekly schedule

Connection to WiFi

Filter replacement indication

Alarm indication

# Technical data

| Parameters | Freshbox 200 ERV WiFi | | | | |
|---|---|---|---|---|---|
| **Speed** | I | II | III | IV | V |
| **Voltage [V / 50 (60) Hz]** | 1~230 | | | | |
| **Max. power [W]** | 10 | 15 | 25 | 44 | 134 |
| **Max. current consumption [A]** | 1.0 | | | | |
| **Maximum air flow [m³/h (l/s)]** | 30 (8) | 60 (17) | 90 (25) | 120 (33) | 200 (56) |
| **RPM [min⁻¹]** | 2000 | | | | |
| **Sound pressure level at 3 m [dBA]** | 12 | 22 | 30 | 36 | 45 |
| **Transported air temperature [°C]** | -15...+40 | | | | |
| **Casing material** | polymer coated steel | | | | |
| **Insulation thickness [mm]** | 30 | | | | |
| **Extract filter** | G4 | | | | |
| **Supply filter** | G4 + F7 (Option: H13) | | | | |
| **Connected air duct diameter [mm]** | 100 | | | | |
| **Weight [kg]** | 55 | | | | |
| **Temperature recovery efficiency [%]** | 85 | 81 | 75 | 68 | 66 |
| **Heat recovery core type** | counter-flow | | | | |
| **Heat recovery core material** | enthalpic membrane | | | | |

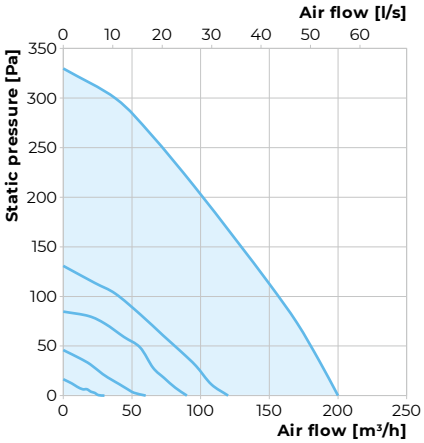


## Dimensions [mm]

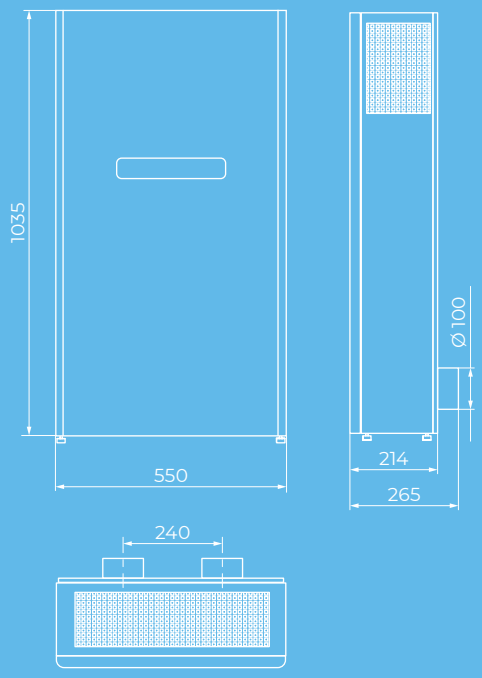




**Air ducts can be taken out through the windows**

## Mounting example

Each space requiring ventilation is equipped with one or several **Freshbox 200 ERV WiFi** units.

Can be upgraded with a bathroom exhaust air duct. To enable such a configuration the units can be additionally equipped with the optional Ø 100 mm spigot (supplied as standard).

**Freshbox 200 ERV WiFi mounting example in the appartment**

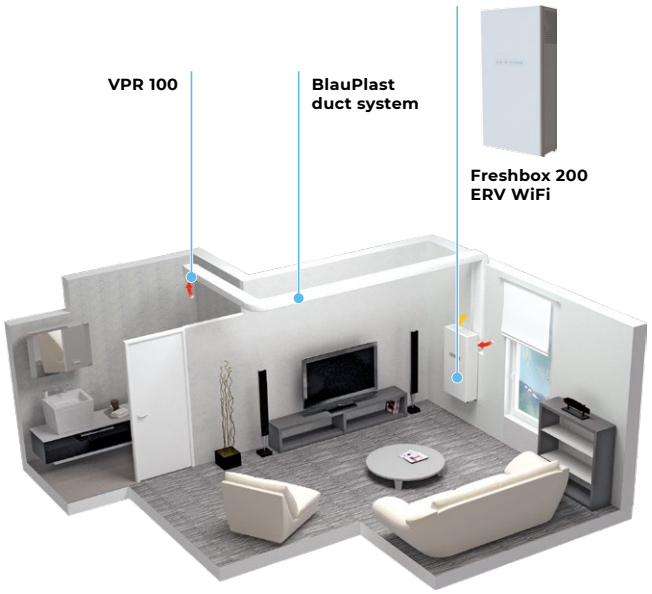


**Freshbox 200 ERV WiFi mounting example in the office**

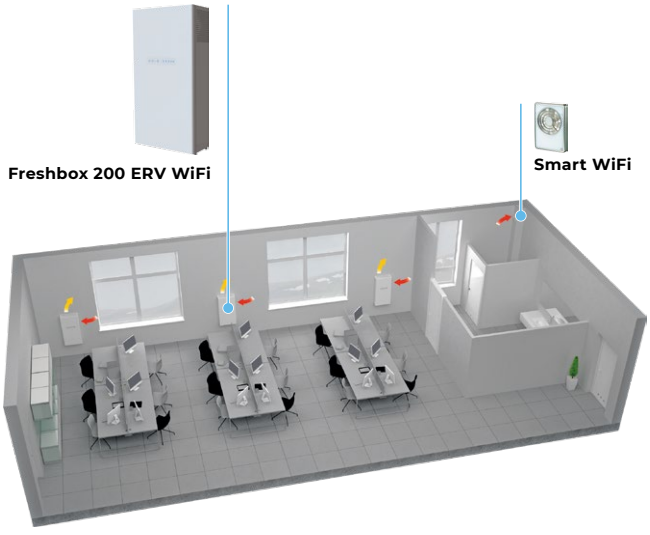


## Accessories

| Name | | Description |
|---|---|---|
| **MS Freshbox 200 chrome** |  | **Mounting kit:**<br>· Two Ø 100 mm air ducts, 500 mm long<br>· Ventilation outer hood made of polished steel<br>· Cardboard template |
| **MS Freshbox 200 white** |  | **Mounting kit:**<br>· Two Ø 100 mm air ducts, 500 mm long<br>· Ventilation outer hood, painted white<br>· Cardboard template |
| **AH Freshbox 200 chrome** |  | Ventilation outer hood made of polished steel |
| **AH Freshbox 200 white** |  | Ventilation outer hood, painted white |
| **FP 201x162x20 G4** |  | Exhaust G4 panel filter |
| **FP 243x162x20 G4** |  | Supply G4 panel filter |
| **FP 502x162x40 F7** |  | Supply F7 panel filter |
| **FP 502x162x40 H13** |  | Supply HEPA H13 panel filter |
| **HR-S** |  | Humidity sensor |
| **CD-1** |  | $CO_2$ sensor with LED $CO_2$ indication and a sensor button for operation mode selection |
| **CD-2** |  | $CO_2$ sensor |



# HYBRID MAX ERV

## DECENTRALIZED UNIT FOR THE SMALL OFFICES, FACILITIES, CLASSROOMS AND LIVING SPACES



**160** m³/h

from **16** dBA

up to **95** %

EC motor

WiFi READY

BMS

Hey Google

## FEATURES

- Efficient decentralized ventilation unit for small offices or conference rooms.
- Visible ceiling suspended installation.
- Clean air due to the use of an F7 filter for supply air filtration.
- Low noise operation from 16 dBA at 3m.
- Possibility to connect fresh air inlet and exhaust air ducts at top or back side of the unit.
- High level of comfort due to built-in bypass and air dampers.
- Air ducts can be taken out through the windows.

### Casing

The casing is made of galvanized sheet metal with white painted decorative cover. The contemporary design of the Hybrid Max unit will seamlessly blend into any interior. The unit is heat- and sound-insulated with a 20 mm layer of foam. The service panel is easy to open for filter maintenance. The unit is equipped with two Ø 125 mm spigots for fresh air intake and stale air exhaust. The position of the spigots can be changed from horizontal to vertical.

### Bypass

The **Hybrid Max ERV** units are equipped with a bypass for ventilation (air cooling by the cool air from outside).

### Air dampers

The **Hybrid Max ERV** unit is equipped with two automatic air dampers, which close automatically when the unit is off to prevent drafts.

### Fans

The units feature high-performance, electronically commutated (EC), external rotor motors with forward curved blades. These state-of-the-art units offer excellent energy efficiency. In addition to that, EC motors combine high performance and optimum control over the entire speed range. EC motors have an excellent power efficiency (up to 90 %).

## Design

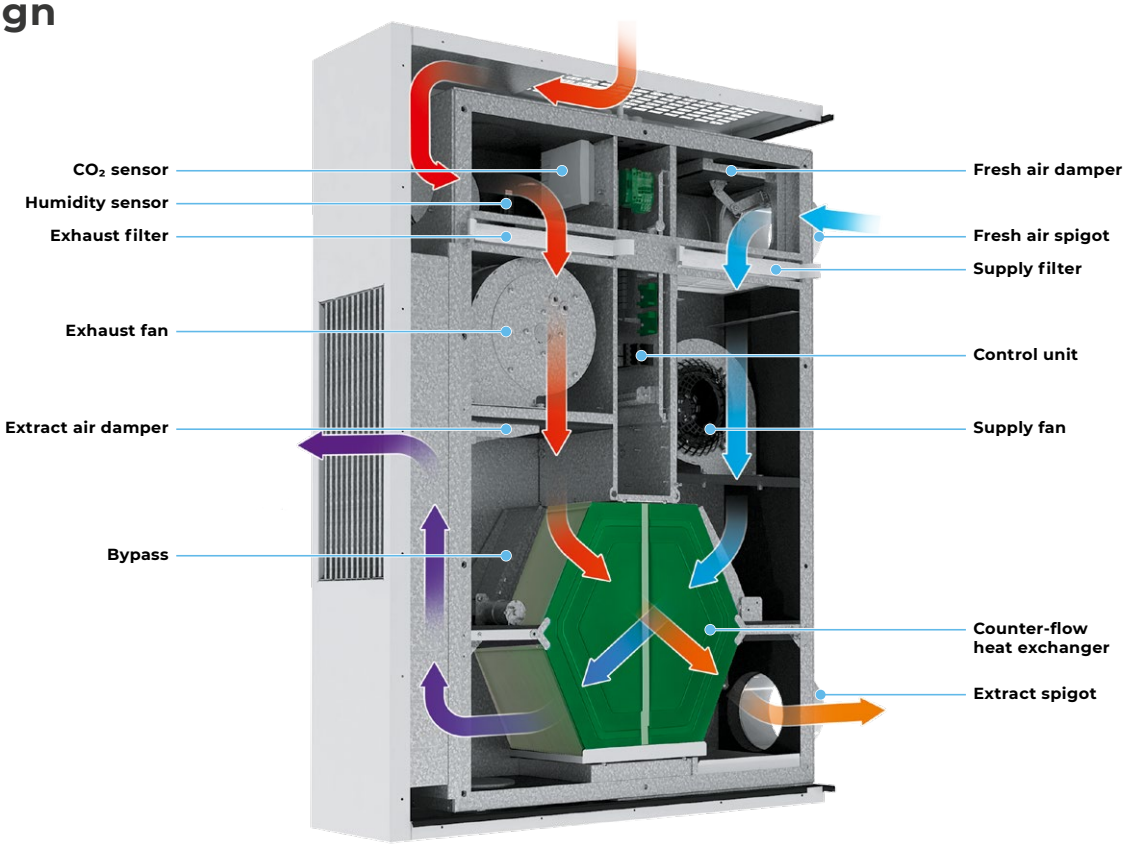


## Air distribution




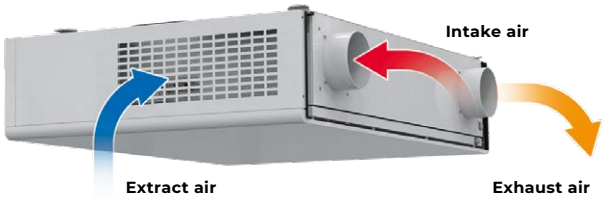


## Heat recovery

The **Hybrid Max ERV** unit is equipped with an enthalpy plate counter-flow heat exchanger for energy (heat and humidity) recovery. Due to humidity recovery condensate is not generated in the enthalpy heat exchanger.




The air flows are completely separated in the heat exchanger. Thus smells and contaminants are not transferred from the extract air to the supply air.

Heat recovery is based on heat and/or humidity transfer through the heat exchanger plates. In the cold season supply air is heated in the heat exchanger by transferring the heat energy of warm and humid extract air to the cold fresh air. Heat recovery minimizes ventilation heat losses and heating costs respectively.

In the warm season the heat exchanger performs reverse and intake air is cooled in the heat exchanger by the cool extract air. That reduces operation load on air conditioners and saves electricity.

## Control and automation

The **Hybrid Max ERV S21** units are equipped with an integrated automation system. The remote control panel is not included in the delivery set (sold separately).

The S21 controller allows integrating the unit into the Smart Home system or **BMS (Building Management System)**.

Unit control via Wi-Fi using the mobile application Blauberg AHU.

The **Hybrid Max ERV S14** units are equipped with an integrated automation system and the S14 wall mounted sensor control panel with LED-indication.

Download the Blauberg Home app for Android

Download the Blauberg Home app for iOS

Modbus

## Automation functions

| Functions | Hybrid Max S21 | Hybrid Max S14 |
|---|---|---|
| **Unit control via Wi-Fi using a mobile application** | + | – |
| **Unit control via a wired remote control panel** |  S22 control panel (option) |  S14 control panel |
| **Unit control via a wireless remote control panel** |  S22 Wi-Fi control panel (option) | – |
| **Unit control via a remote wired LCD control panel** |  S25 control panel (option) | – |
| **BMS (Building Management System)** | RS-485 | – |
| | Wi-Fi | – |
| | Ethernet | – |
| | MODBUS (RTU, TCP) | – |
| **Speed selection** | + | + |
| **Filter replacement indication** | by filter timer | by filter timer |
| **Alarm indication** | full alarm description in the mobile application | – |
| **Week-scheduled operation** | + | – |
| **Bypass** | automatic | manual |
| | manual | – |
| **Timer** | + | – |
| **Boost mode** | + | – |
| **Fireplace mode** | + | – |
| **Cooler connection** | option | – |
| **Minimum supply air temperature control** | option | – |
| **Humidity control** | option | option |
| **$CO_2$ control** | option | option |
| **VOC control** | option | option |
| **PM2.5 control** | option | option |
| **Fire alarm sensor connection** | option | – |

# Technical data

| Model | Hybrid Max ERV | | |
|---|---|---|---|
| **Voltage [V / 50/60 Hz]** | 1~ 230 | | |
| **Max. unit power [W]** | 58 | | |
| **Max. unit current [A]** | 0.5 | | |
| **Max air flow [m³/h]** | 160 | | |
| **RPM [min⁻¹]** | 2800 | | |
| **Speed [m³/h]** | 60 | 90 | 160 |
| **Sound pressure level LpA to environment at 1 m [dBA]** | 25 | 35 | 42 |
| **Sound pressure level LpA to environment at 3 m [dBA]** | 16 | 26 | 32 |
| **Operating temperature [°C]** | –25...+40 | | |
| **Case material** | Aluzinc | | |
| **Insulation [mm]** | 20 | | |
| **Extract filter** | Coarse 90% / G4 | | |
| **Supply filter** | ePM1 70% / F7 (G4 option) | | |
| **Connected air duct diameter [mm]** | 125 | | |
| **Weight [kg]** | 47 | | |
| **Temperature recovery efficiency [%]** | 74–89 | | |
| **Heat exchanger type** | Counter-flow | | |
| **Heat exchanger material** | Enthalpic membrane | | |

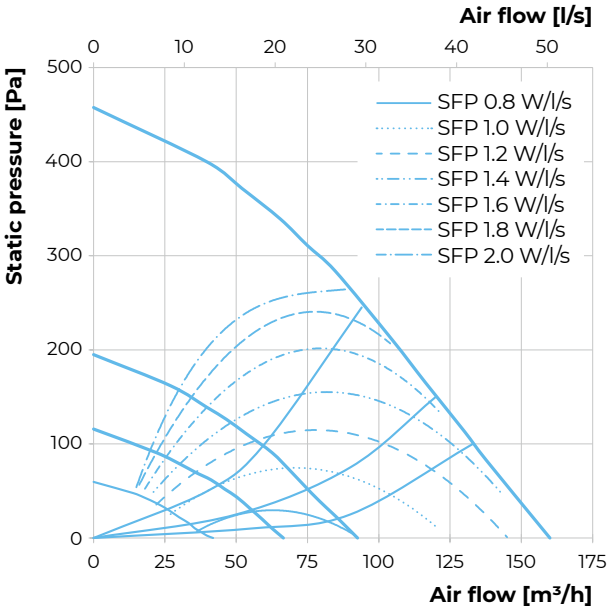


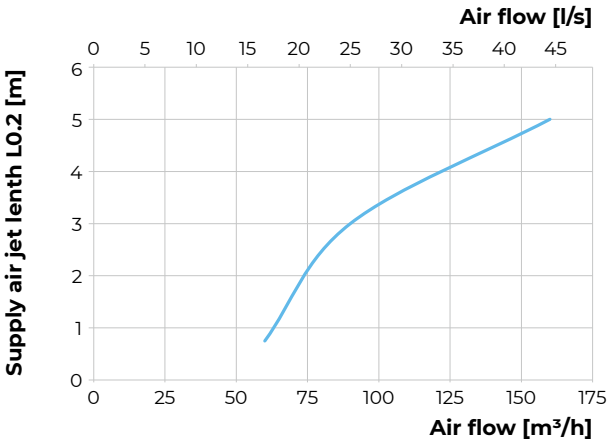


# Sound power level

| Sound power level, A-weighted | Total | Octave frequency bands [Hz] | | | | | | | | | LpA 3 m | LpA 1 m |
|---|---|---|---|---|---|---|---|---|---|---|---|---|
| | | 200 | 250 | 315 | 400 | 500 | 630 | 800 | 1000 | 1250 | | |
| **LwA to environment at 160 m³/h** | **53** | 37 | 41 | 41 | 45 | 49 | 40 | 42 | 41 | 38 | **32** | **42** |
| **LwA to environment at 90 m³/h** | **46** | 31 | 37 | 43 | 36 | 35 | 33 | 34 | 33 | 30 | **26** | **35** |
| **LwA to environment at 60 m³/h** | **36** | 32 | 25 | 24 | 25 | 24 | 23 | 23 | 21 | 19 | **16** | **25** |

| Sound power level, A-weighted | Total | Octave frequency bands [Hz] | | | | | | | | | LpA 3 m | LpA 1 m |
|---|---|---|---|---|---|---|---|---|---|---|---|---|
| | | 1600 | 2000 | 2500 | 3150 | 4000 | 5000 | 6300 | 8000 | 10000 | | |
| **LwA to environment at 160 m³/h** | **53** | 37 | 37 | 35 | 31 | 27 | 23 | 21 | 24 | 25 | **32** | **42** |
| **LwA to environment at 90 m³/h** | **46** | 29 | 29 | 27 | 24 | 21 | 19 | 19 | 23 | 24 | **26** | **35** |
| **LwA to environment at 60 m³/h** | **36** | 18 | 18 | 19 | 17 | 17 | 18 | 19 | 23 | 24 | **16** | **25** |

## Dimensions [mm]

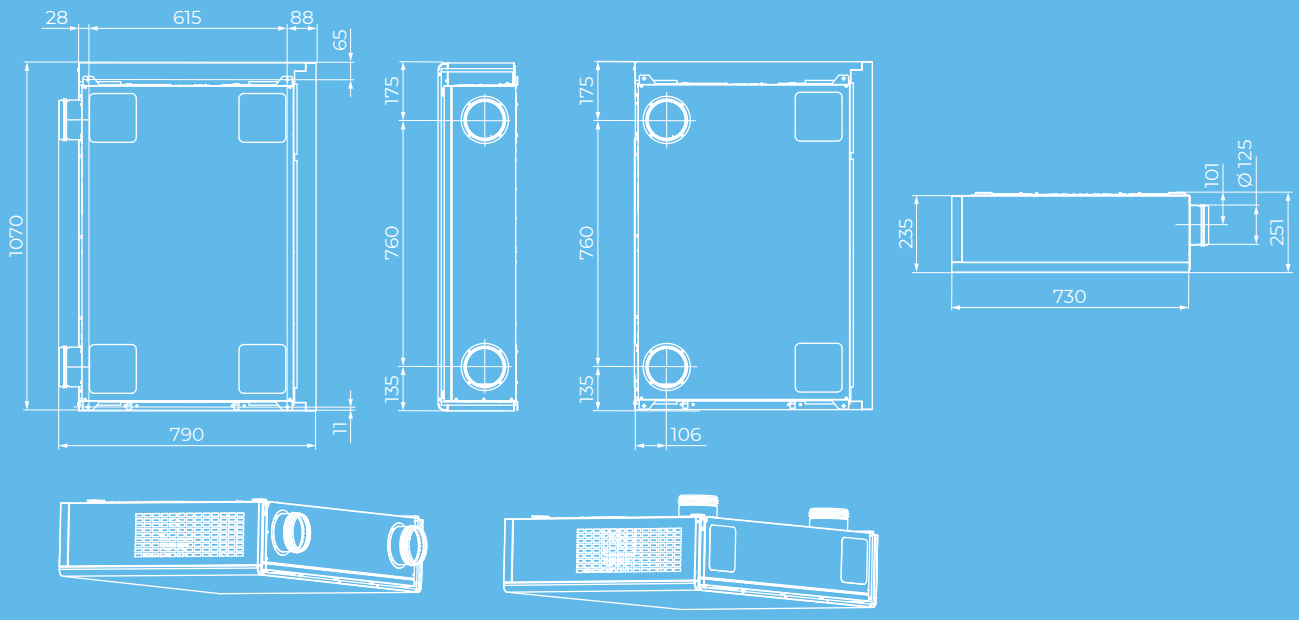


## Mounting

**Mounting to the supporting structure.
The spigots pass through the front wall**



**Mounting through
a suspended ceiling**



**Mounting to the supporting structure**

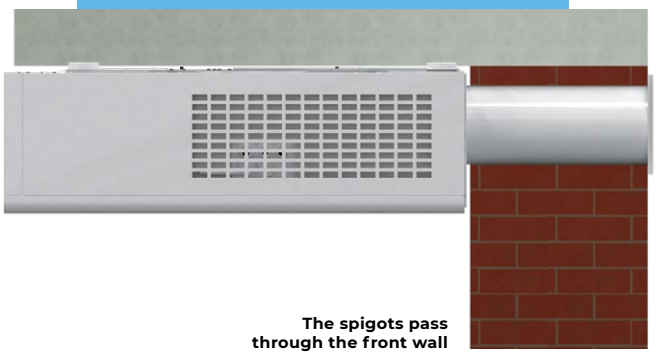

**The spigots pass
through the front wall**

# Accessories

| | | Hybrid Max ERV S14 | Hybrid Max ERV S21 |
|---|---|---|---|
| **G4 panel filter** |  | FP 233x175x22 G4 | FP 233x175x22 G4 |
| **F7 panel filter** |  | FP 233x175x22 F7 | FP 233x175x22 F7 |
| **Control panel** |  | – | S22 |
| **Wireless control panel** |  | – | S22 Wi-Fi |
| **LCD control panel** |  | – | S25 |
| **Humidity sensor** |  | FS2 | FS2 |
| **Humidity sensor** |  | HR-S | HR-S |
| **Humidity sensor** |  | – | DPWC11200 |
| **$CO_2$ sensor with indication** |  | CD-1 | CD-1 |
| **$CO_2$ sensor** |  | CD-2 | CD-2 |
| **$CO_2$ sensor** |  | CD-3 | CD-3 |

| | | Hybrid Max ERV S14 | Hybrid Max ERV S21 |
|---|---|---|---|
| **$CO_2$ sensor** |  | – | DPWQ40200 |
| **VOC sensor** |  | – | DPWQ30600 |
| **Outer grille** |  | VDA 125 CFn Al | VDA 125 CFn Al |



# VENTO ERGO A85-3 L035 S PRO V.3

## HEAT RECOVERY SINGLE-ROOM UNITS

up to **85** m³/h

from **13** dBA

up to **88** %

EC motor



## FEATURES

Arrangement of efficient energy-saving supply and exhaust single-room ventilation in flats, houses, cottages, social and commercial premises.

Heat recovery minimises ventilation heat and cool losses.

Reduce the heating costs in winter and air conditioning costs in summer.

Coordinated network based on several integrated single-room ventilation units with central control.

## Designation key

| Model | Air duct | Rated air flow [m³/h] | Front panel | Duct length | Hood type | Control |
|---|---|---|---|---|---|---|
| **Vento Ergo** | **A:** round air duct | 85 | **-3:** flat front panel | **L035:** 350 mm | **S:** AH-S chrome 150 metal hood for thin walls | **Pro:** three-position switches and remote control |

# Design

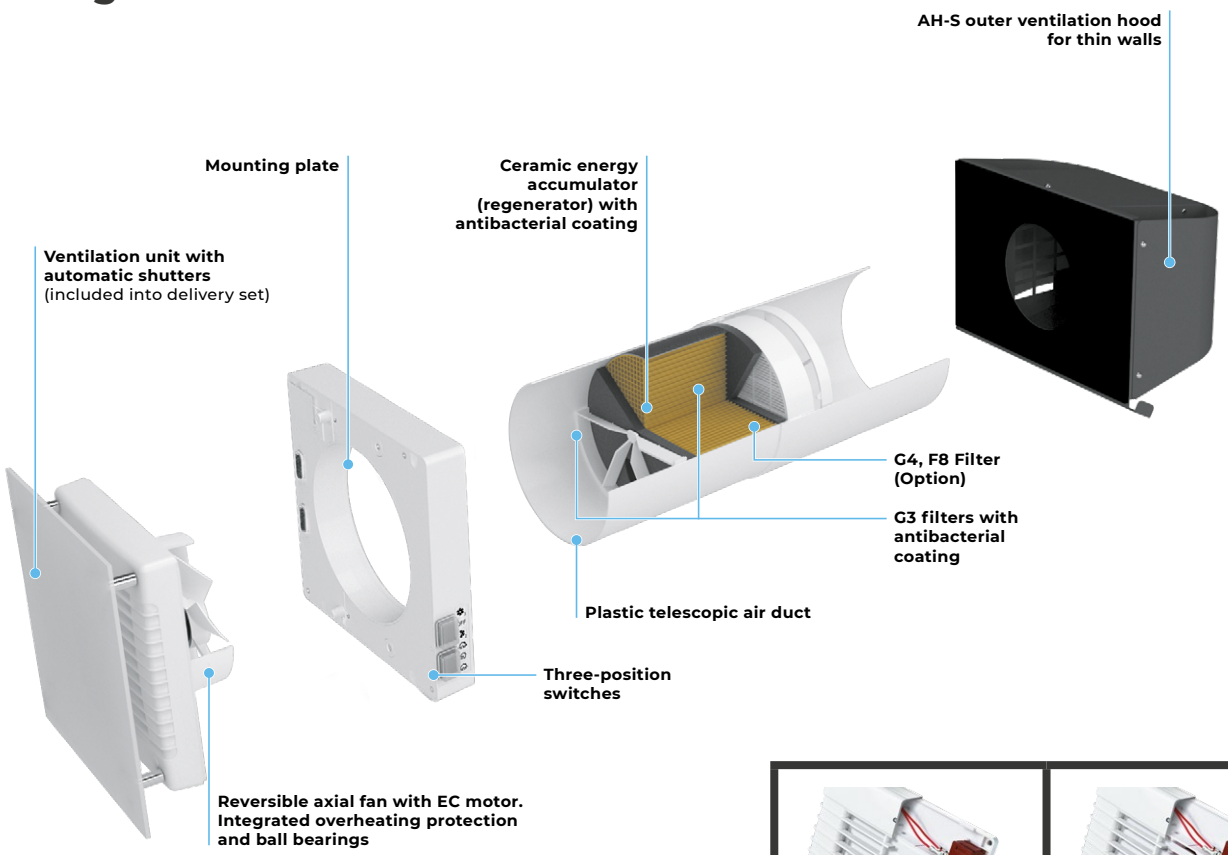


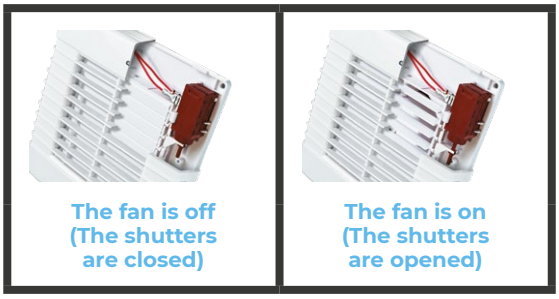


# Heat and cool regeneration

High-tech ceramic energy accumulator with heat recovery up to 90 %.

Due to its cellular structure it has a larger heat transfer area surface and high efficiency.

## UNIT OPERATING LOGIC IN HOT SEASON

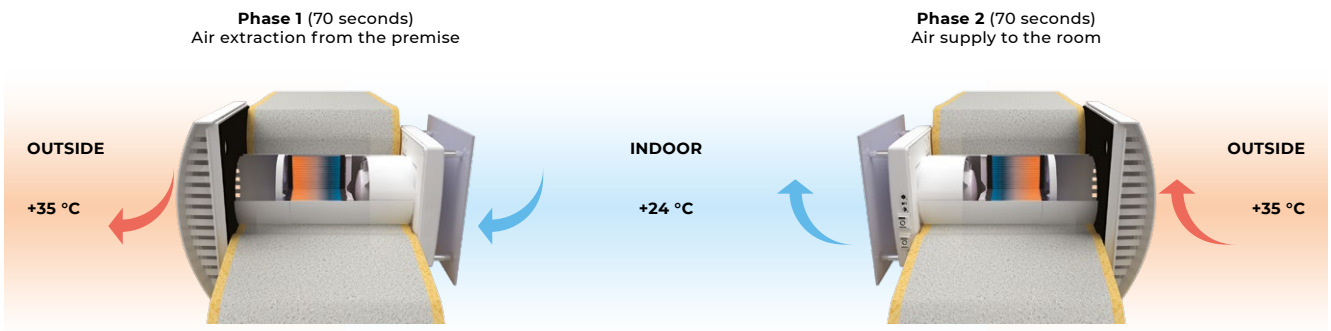


Cool exhaust air is drawn out of the room, reducing the temperature of the ceramic regenerator. As the ceramic regenerator gets cooled down, the unit switches to the supply mode.

Clean hot intake air flows through the regenerator accumulating heat in its mass. When the ceramic regenerator is warmed up, the unit switches to the extract air mode.

# Control

The unit operation mode control is performed by means of manual three-position switches located on the unit casing or using the remote controller.

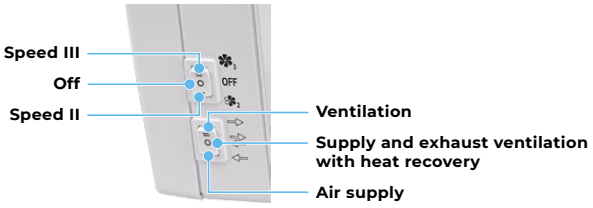


Connection of the units into one ventilation system provide balanced ventilation and central control.

Remote control and operation mode selection:

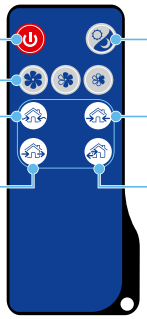

**Unit activation/deactivation**

**3 unit speeds**

**Passive air supply mode:**
The automatic shutters are opened, the fan does not run.

**Ventilation mode:**
The integrated units operate in permanent air supply or air extract mode depending on settings during mounting. The unit is set into air extract mode by default.

**Night mode:**
In the night the unit is switched to low speed mode by the photo sensor.

**Air supply mode:**
The unit operates in permanent air supply mode.

**Reversible ventilation with heat recovery:**
The unit switches from supply to extract mode and vice versa in set time periods and transfers the heat and moisture contained in the extract air to cold intake air in winter or the coolness in summer through the ceramic heat exchanger.

Connection of several units in series enables their synchronous control by the first unit. The signal from the remote control is received by the first unit only.

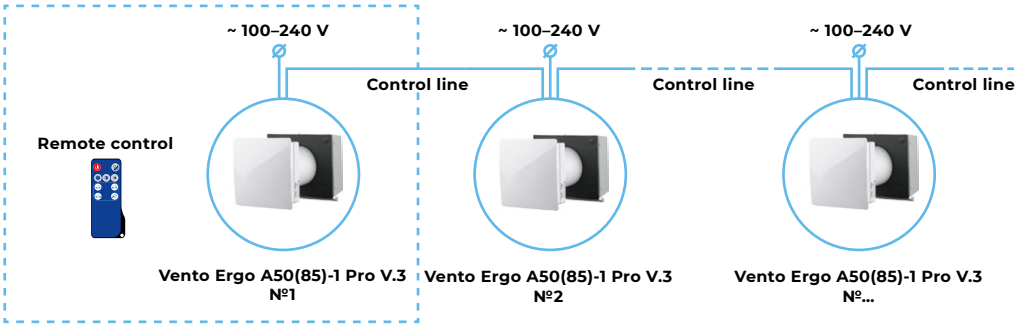


## Dimensions [mm]

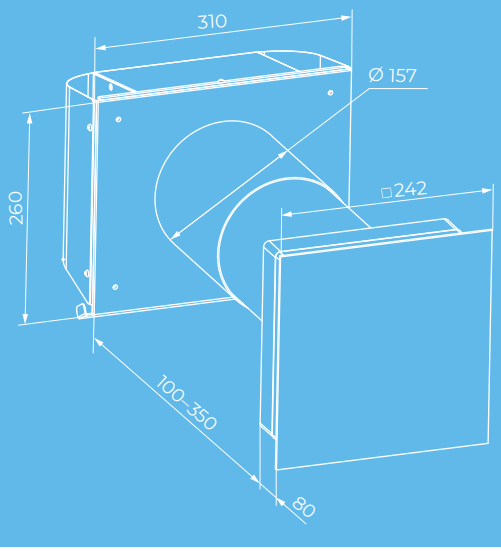

## Mounting

The unit is designed for external through-the-wall installation inside a prepared round hole in the outer wall of the building.

The best ventilation solution is pairwise installation of reverse phase connected units. Some units supply fresh air to the room and the other units extract stale air from the room. This allows to arrange the most efficient balanced ventilation.

In case of brand new construction the units are mounted in two stages:

- **pre-installation** at the stage of the indoor finishing and outer decorative wall finishing. It includes installation of the telescopic air ducts, outer ventilation hood and laying out of electric cables.
- **final mounting** before commissioning of a house. It includes installation of the regenerator, the filters, connection of the ventilation unit.

If mounting of the ventilation hood on the outer wall is undesirable it may be flush mounted and the external grille may be inserted into the outer window jamb using the **KIT BlauPlast 204x60-1** pre-installation kit. Available upon separate order.

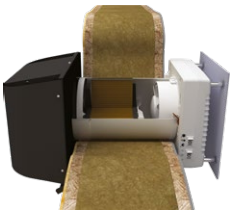

Vento Ergo unit installation example into a thin wall

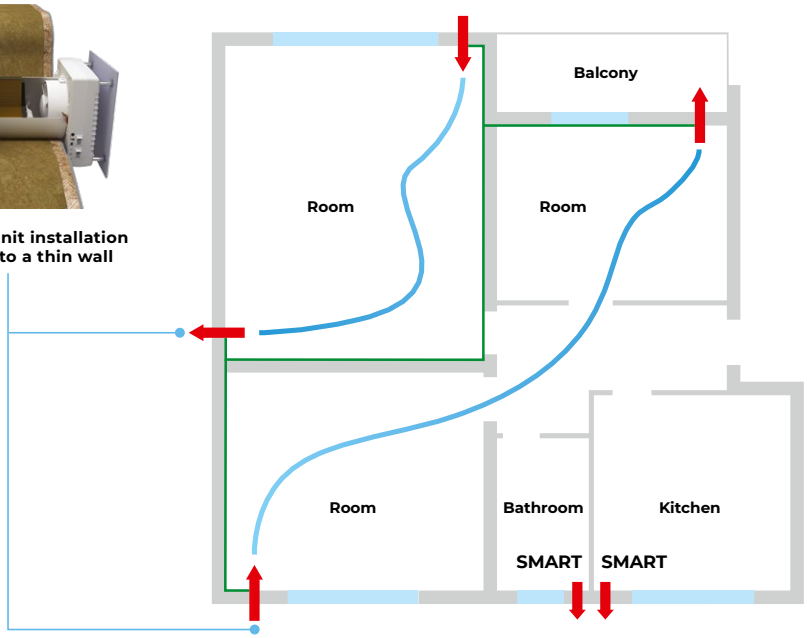


Angular mounting into a wall with standard thickness using KIT BlauPlast 204x60-1

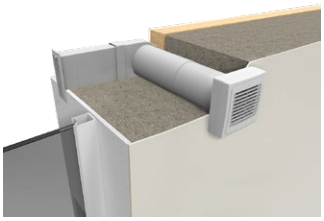

## Technical data

| Parameters | Vento Ergo A85-3 L035 S Pro V.3 | | |
|---|---|---|---|
| **Speed** | I | II | III |
| **Voltage [V / 50 (60) Hz]** | 1 ~ 100–240 | | |
| **Power [W]** | 4.74 | 6.56 | 9.65 |
| **Current [A]** | 0.034 | 0.050 | 0.071 |
| **RPM [min$^{-1}$]** | 1000 | 1500 | 2045 |
| **Maximum air flow [m³/h (l/s)]** | 36 (10) | 59 (16) | 85 (24) |
| **Air flow in heat recovery mode [m³/h (l/s)]** | 18 (5) | 30 (8) | 43 (12) |
| **SFP [W/l/s]** | 0.95 | 0.80 | 0.82 |
| **Filter** | G3 (Option: G4, F8 PM2.5 > 99 %*) | | |
| **Temperature exchange efficiency (heating) [%]** | 85 | 81 | 72 |
| **Temperature exchange efficiency (cooling) [%]** | 83 | 81 | 71 |
| **Enthalpy exchange efficiency (heating) [%]** | 84 | 73 | 59 |
| **Enthalpy exchange efficiency (cooling) [%]** | 84 | 74 | 60 |
| **Transported air temperature [°C]** | -20...+40 | | |
| **Ingress protection rating** | IP24 | | |

# Accessories

| | | Vento Ergo A50-1 Pro V.3 | Vento Ergo A85-1 Pro V.3 |
|---|---|---|---|
| **Pre-installation Kit Vento Ergo A50 S10 Pro** |  | Pre-installation kit for mounting into a wall with standard thickness.<br>**Includes:**<br>• Round telescopic air duct with the diameter of 150 mm and adjustable length from 240 to 460 mm<br>• AH-10 white 160 outer ventilation hood<br>• Plastic foam plug<br>• Plastic foam wedges | |
| **Completion Kit Vento Ergo A50(85)-1 Pro V.3** |  | **Includes:**<br>• Ceramic regenerator Ø 150 mm<br>• Vento Ergo A50-1 ventilation unit<br>• G3 filters<br>• Mounting plate<br>• Remote control | **Includes:**<br>• Ceramic regenerator Ø 150 mm<br>• Vento Ergo A85-1 ventilation unit<br>• G3 filters<br>• Mounting plate<br>• Remote control |
| **FP Vento Ergo A50 G3** |  | G3 filters (2 pcs.) | |
| **FPC 150x50 G4** |  | G4 filter | |
| **FP Vento Ergo A50 F7** |  | F7 filter | |
| **AH-S grey 150** |  | Outer ventilation hood for thin wall, painted grey | |
| **AH-S chrome 150** |  | Outer ventilation hood for thin wall made of brushed stainless steel | |
| **KIT BlauPlast 204x60-1** |  | Installation kit for angular mounting.<br>**Includes:**<br>• Plastic ventilation grille 230x86 mm<br>• Plastic air duct 204x60 mm<br>• Plastic connecting bend from Ø 150 to 204x60 mm | |
| **FB Vento Ergo** |  | Remote control | |



# VENTO EXPERT A50 C1-1 L035 S CHROME W V.2

## HEAT RECOVERY SINGLE-ROOM UNITS

up to **50** m³/h

from **4** dBA

up to **88** %

EC motor

Wi Fi READY

Hey Google



## FEATURES

Arrangement of efficient energy-saving, supply and exhaust, single-room ventilation in flats, houses, cottages, social and commercial premises.

Reducing heat and cool losses caused by ventilation due to heat recovery.

Reduce the heating costs in winter and air conditioning costs in summer.

Wi-Fi data exchange between several single-room ventilation units for coordinated operation.

Controlled by Android or iOS smartphone or tablet.

## Designation key

| Model | Air duct | Rated air flow [m³/h] | Cartrige | Front panel | Duct length | Ventilation hood type | Control | Indoor unit color |
|---|---|---|---|---|---|---|---|---|
| **Vento Expert** | **A:** round air duct | 50 | **C1:** compact monocblock with short heatexchanger | **-1:** flat front panel | **L035:** 350 mm | **_:** white plastic hood AH-10 white 160 (for standard walls)<br>**S:** metal hood (for thin walls) | **W V.2:** control and setup of the unit with the Wi-Fi mobile application | **BLK:** mat black color of indoor unit |

# Design

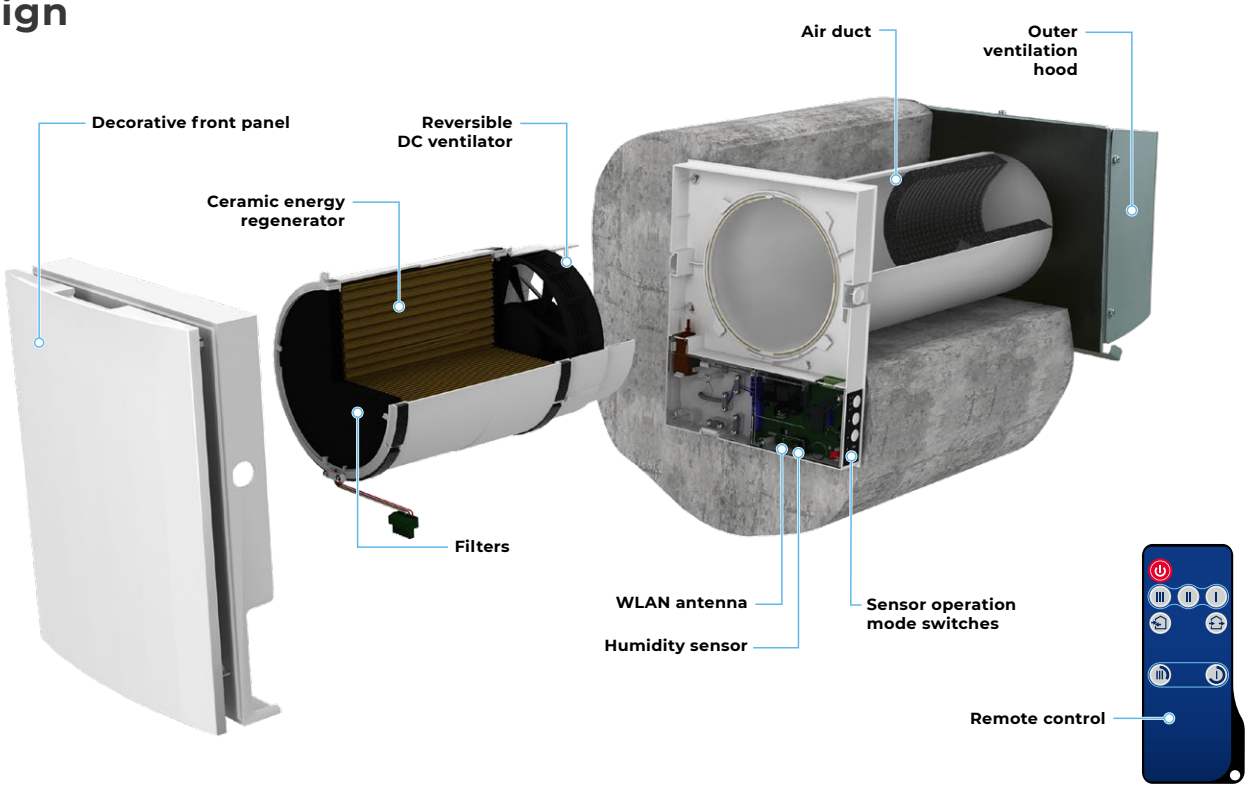




One of the best regeneration efficiency on the market due to innovative hexagonal structure of the heat exchanger cells

Wi Fi READY

Built-in Wi-Fi for wireless communication between units and Android or iOS device control



Integrated automatic air shutters prevent air back drafting



The specially designed front panel can be closed manually to ensure 100 % air tightness and protect against wind impact

# Heat recovery mode

## UNIT OPERATING LOGIC IN HOT SEASON

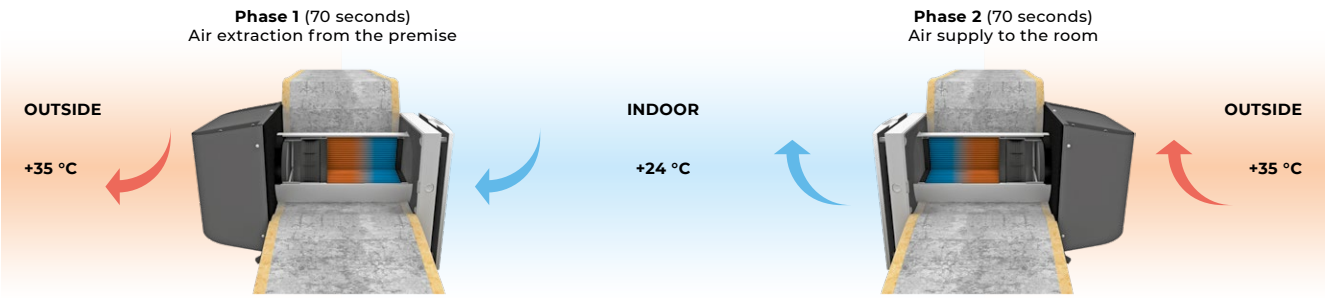


Cool exhaust air is drawn out of the room, reducing the temperature of the ceramic regenerator. As the ceramic regenerator gets cooled down, the unit switches to the supply mode.

Clean hot intake air flows through the regenerator accumulating heat in its mass. When the ceramic regenerator is warmed up, the unit switches to the extract air mode.

# Control

Unit control via smartphone or tablet application.

The units can be connected via Wi-Fi for synchronized operation.

House ventilation control via cloud service from anywhere in the world.

Connection to smart house or Building Management System (BMS) via Wi-Fi.

| Download the Blauberg Home app for Android | Download the Blauberg Home app for iOS |
|---|---|

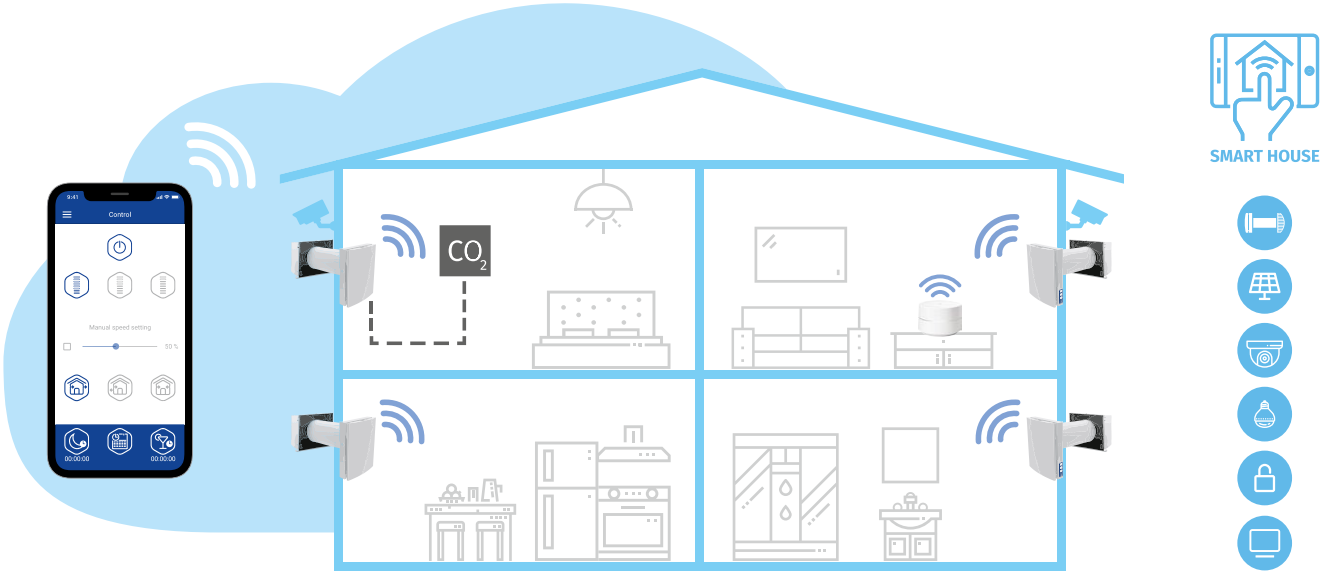


**Vento Expert A50(85)-1 W V.3** either can operate as independent unit or can be connected with other units in a house and controlled with a master unit. In this case, only the master unit receives a signal from the remote control.

## FOR LIVING ROOMS AND BEDROOMS




Vento Expert

## FOR KITCHEN AND BATHROOM




Vento Expert Duo

Control of the unit operation mode is also performed by means of the sensor control panel located on the unit casing or the remote control.

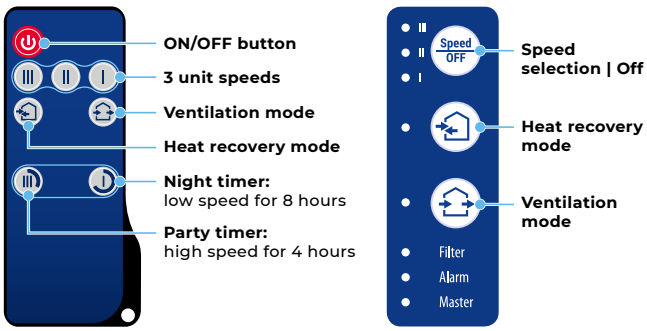


**Vento Expert** is equipped with a humidity sensor for indoor humidity control. If humidity increases above a set point, the unit boosts to the speed III.

# Mounting

The unit is designed for through-the-wall installation inside a prepared hole in an outer wall of the building.

The best ventilation solution is pairwise installation of reverse phase synchronized units. Some units ensure supply of fresh air to the room and the other units extract air from the premise. This way the most efficient balanced ventilation is arranged.

In case of brand new construction, units are mounted in two stages:

- **pre-installation** of an air duct and an outer ventilation hood at the stage of indoor finishing and outer decorative wall finishing;
- **completion of the installation** before commissioning of a house. It includes installation of the indoor unit with controller and shutters the cartridge, the heat exchanger, the fan and the filters.

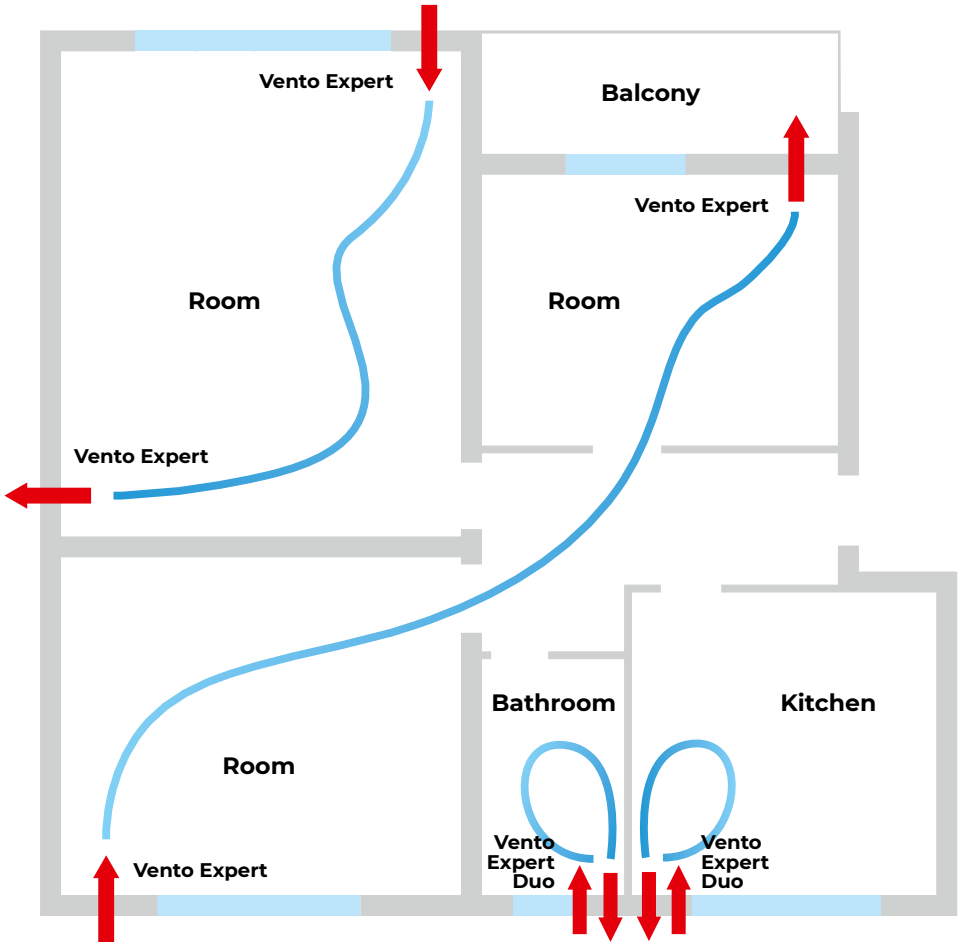


**Unit installation example with the hood for thin walls AH-S grey 160 / AH-S chrome 160**

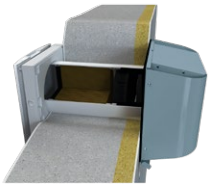

**Angular mounting into a wall with standard thickness using KIT BlauPlast white 160 / KIT BlauPlast chrome 160**



## Dimensions [mm]

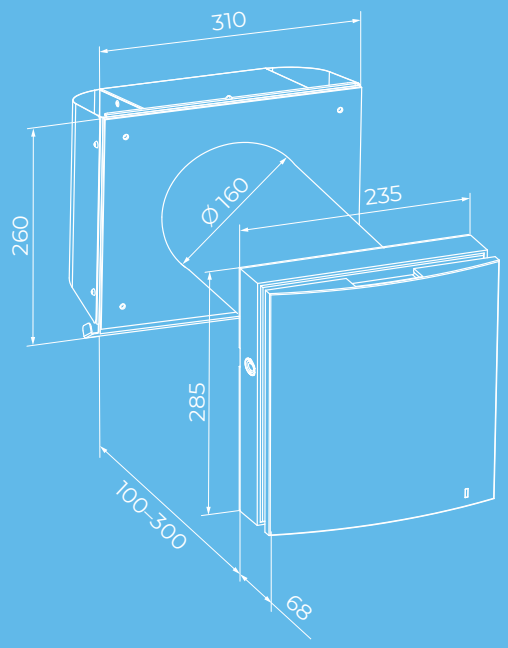


## Technical data

| Parameters | Vento Expert A50 C1-1 L035 S Chrome W V.2 | | |
|---|---|---|---|
| **Speed** | I | II | III |
| **Voltage [V / 50 (60) Hz]** | 100-240 | | |
| **Power [W]** | 4.45 | 5.08 | 7.06 |
| **Current [A]** | 0.035 | 0.040 | 0.059 |
| **RPM [min$^{-1}$]** | 800 | 1300 | 1900 |
| **Air flow in ventilation mode [m³/h (l/s)]** | 15 (4) | 30 (8) | 50 (14) |
| **Air flow in heat recovery mode [m³/h (l/s)]** | 8 (2) | 15 (4) | 25 (7) |
| **SFP [W/l/s]** | 2.14 | 1.22 | 1.02 |
| **Filter** | G3 (G4, F7 optional) | | |
| **Transported air temperature [°C]** | -20...+40 | | |
| **Sound pressure level at 1 m [dBA]** | 20 | 27 | 30 |
| **Sound pressure level at 3 m [dBA]** | 11 | 18 | 21 |
| **Temperature exchange efficiency (heating) [%]** | 88 | 81 | 74 |
| **Temperature exchange efficiency (cooling) [%]** | 87 | 81 | 79 |
| **Enthalpy exchange efficiency (heating) [%]** | 87 | 73 | 65 |
| **Enthalpy exchange efficiency (cooling) [%]** | 84 | 74 | 62 |
| **F7 Filtration rate PM 2.5 [%]** | 99 | | |
| **Airflow with F7 [m³/h (l/s)]** | 40 | | |
| **Ingress protection rating** | IP24 | | |

# Accessories

| | | Description |
|---|---|---|
| **Pre-installation Kit Vento Expert A50-1 S** |  | Pre-installation kit for mounting into thin walls.<br>**Includes:**<br>· Air duct<br>· AH-S chrome 160 outer ventilation hood<br>· Polystyrene foam plug<br>· Polystyrene foam wedges |
| **Completion Kit Vento Expert A50-1 W V.2** |  | Final mounting kit.<br>**Includes:**<br>· Cartridge with a heat exchanger, a fan and G3 filters<br>· Indoor unit with a controller and shutters<br>· Remote control |
| **FP2 Vento G3** |  | G3 filters (2 pcs.) |
| **AH-S white 160** |  | Stainless steel ventilation hood, painted white |
| **AH-S chrome 160** |  | Brushed stainless steel ventilation hood |
| **KIT BlauPlast white 160** |  | Kit for angular mounting with white colour grille (for walls with standard thickness) |
| **KIT BlauPlast chrome 160** |  | Kit for angular mounting with stainless steel outer grille (for walls with standard thickness) |
| **SE Vento Expert W** |  | Sensor control panel |
| **FB Vento Expert A50** |  | Remote control |
| **CD-1** |  | $CO_2$ sensor with LED $CO_2$ indication and a sensor button for operation mode selection |
| **CD-2** |  | $CO_2$ sensor |
| **S Vento Expert A50** |  | Cardboard template for indoor installation of the unit |




BLAUBERG

# VENTO EXPERT A100 C-1 L035 S W V.2

## HEAT RECOVERY SINGLE-ROOM UNITS

up to **108** m³/h

from **4** dBA

up to **88** %

EC motor



## FEATURES

Arrangement of efficient energy-saving, supply and exhaust, single-room ventilation in flats, houses, cottages, social and commercial premises.

Reducing heat losses caused by ventilation due to heat recovery.

Reduce the heating costs in winter and air conditioning costs in summer.

Wi-Fi data exchange between several single-room ventilation units for coordinated operation.

Controlled by Android or iOS smartphone or tablet.

## Designation key

| Model | Air duct | Rated air flow [m³/h] | Cartrige | Front panel | Duct length | Ventilation hood type | Control | Indoor unit color |
|---|---|---|---|---|---|---|---|---|
| **Vento Expert** | **A:** round air duct | 100 | **C1:** compact monocblock with short heatexchanger | **-1:** flat front panel | **L035:** 350 mm | **_:** white plastic hood AH-10 white 160 (for standard walls)<br>**S15:** metal hood for thin walls<br>**S17:** plastic hood for thin walls with compensation insert | **W V.3:** control and setup of the unit with the Wi-Fi mobile application | **BLK:** mat black color of indoor unit |

# Design

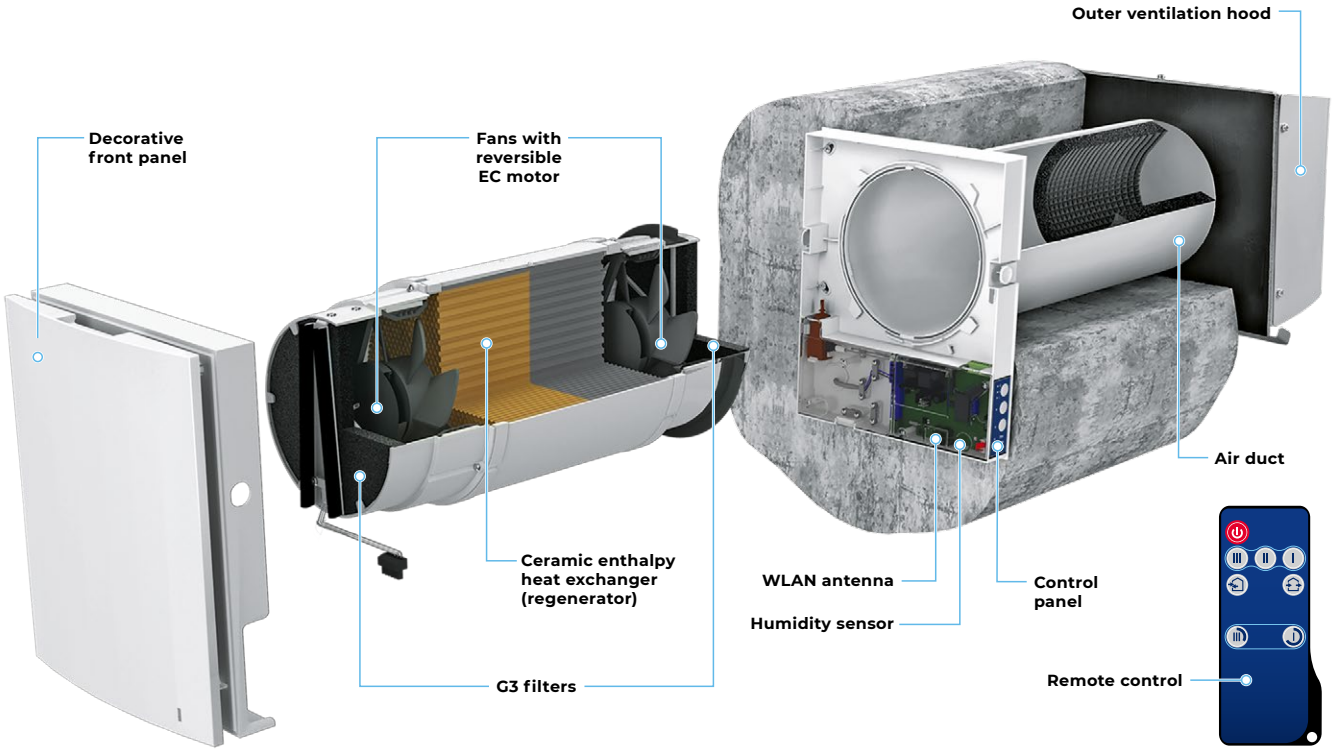




Easy maintenance. Indoor unit is opened by pressing the latches on both sides



One of the best regeneration efficiency on the market due to innovative hexagonal structure of the heat exchanger cells



Integrated automatic air shutters prevent air back drafting



The specially designed front panel can be closed manually to ensure 100 % air tightness and protect against wind impact



The demountable design of the regenerator cartridge improves heat recovery efficiency and simplifies maintenance

# Heat recovery mode

## UNIT OPERATING LOGIC IN HOT SEASON

**Phase 1** (70 seconds)
Air extraction from the premise

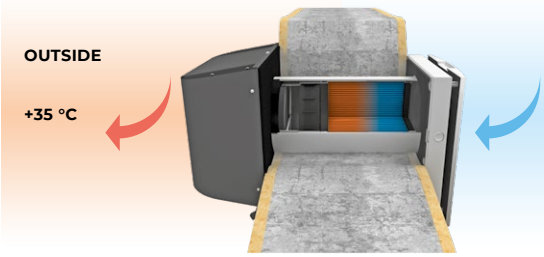


Cool exhaust air is drawn out of the room, reducing the temperature of the ceramic regenerator. As the ceramic regenerator gets cooled down, the unit switches to the supply mode.

**Phase 2** (70 seconds)
Air supply to the room

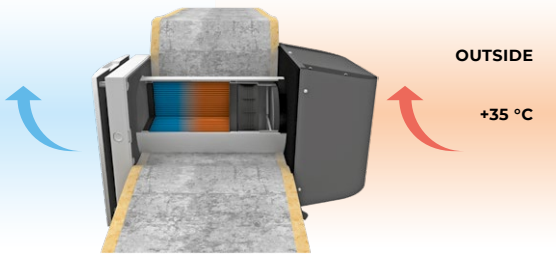


Clean hot intake air flows through the regenerator accumulating heat in its mass. When the ceramic regenerator is warmed up, the unit switches to the extract air mode.

# Control

Control of the unit operation mode is performed by means of sensor control panel located on the unit casing or a remote controller.

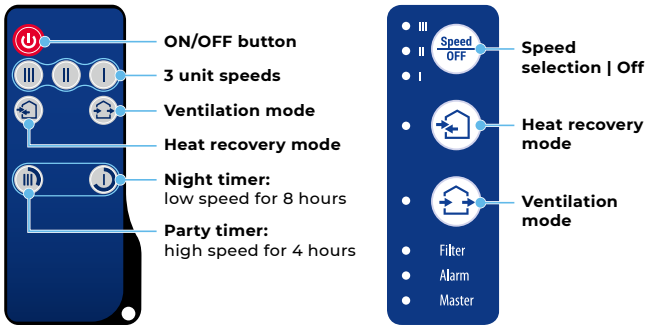


**Vento Expert** is equipped with a humidity sensor for indoor humidity control. If humidity increases above a set point, the unit boosts to the speed III or this feature can be disabled.

**Vento Expert** either can operate as independent unit or can be connected with other units in a house and controlled with a master unit. In this case, only the master unit receives a signal from the remote control.

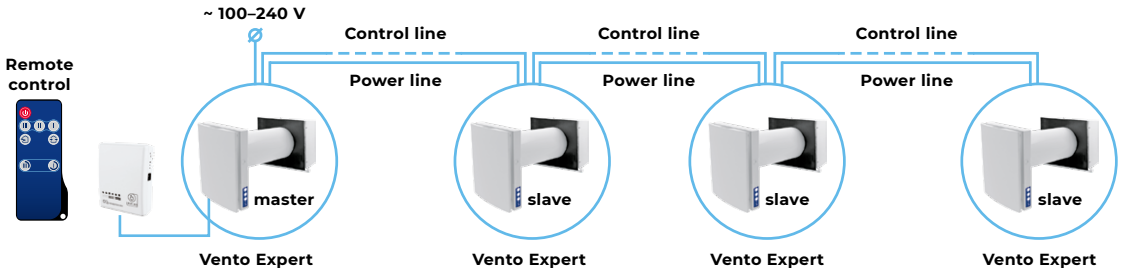


# Mounting

The unit is designed for through-the-wall installation inside a prepared hole in an outer wall of the building.

The best ventilation solution is pairwise installation of reverse phase connected units. Some units ensure supply of fresh air to the room and the other units extract air from the premise. This way the most efficient balanced ventilation is arranged.

In case of brand new construction, units are mounted in two stages:

- **pre-installation** at the stage of the indoor finishing and outer decorative wall finishing. It includes installation of an air duct, an outer ventilation hood and cable installation;
- **final mounting** before commissioning of a house. It includes installation of a regenerator with a fan and filters and mounting and wiring of an indoor unit with a controller and shutters.

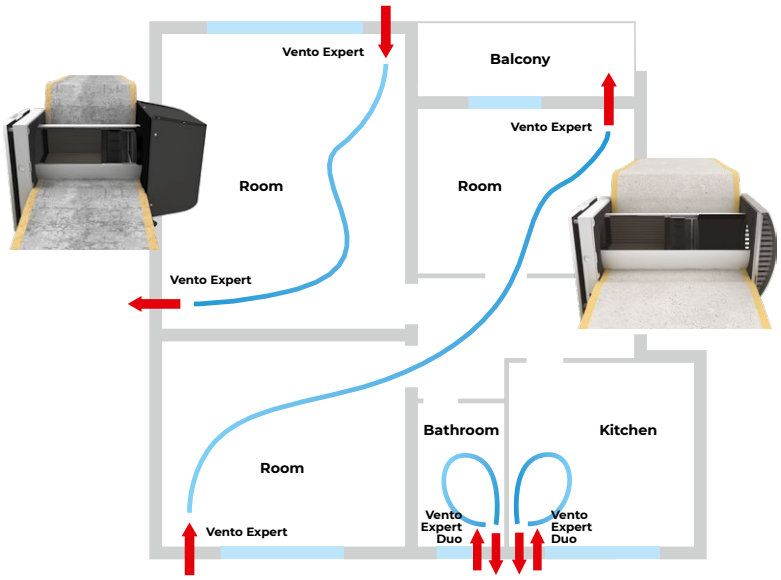


**Angular mounting into a wall with standard thickness using KIT BlauPlast white 160 / KIT BlauPlast chrome 160**



## Dimensions [mm]

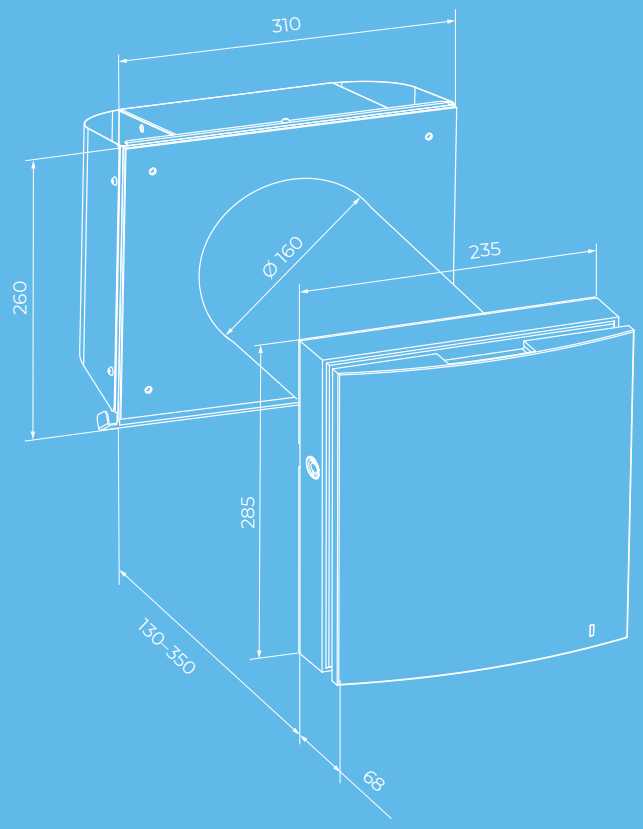


## Technical data

| Parameters | VentoExpert A100 C-1 L035 S W V.2 | | | |
|---|---|---|---|---|
| **Speed** | 1 | 2 | 3 | MAX |
| **Voltage [V / 50 (60) Hz]** | 100–240 | | | |
| **Power [W]** | 3.20 | 4.00 | 6.60 | 18.00 |
| **Current [A]** | 0.037 | 0.046 | 0.071 | 0.151 |
| **Air flow in ventilation mode [m³/h (l/s)]** | 18 (5) | 30 (8) | 58 (16) | 108 (30) |
| **Air flow in heat recovery mode [m³/h (l/s)]** | 9 (3) | 15 (4) | 29 (8) | 54 (15) |
| **SFP [W/l/s]** | 1.28 | 0.96 | 0.82 | 1.20 |
| **1/n** | 780 | 1100 | 1920 | 2940 |
| **Sound pressure level at 1 m [dBA]** | 23 | 27 | 40 | 51 |
| **Sound pressure level at 3 m [dBA]** | 13 | 18 | 30 | 42 |
| **Temperature exchange efficiency (heating) [%]** | 88 | 84 | 79 | 71 |
| **Temperature exchange efficiency (cooling) [%]** | 87 | 76 | 65 | 59 |
| **Transported air temperature [°C]** | -20...+40 | | | |
| **Filter** | G3 (G4, F7 optional) | | | |
| **IP** | 24 | | | |

# Accessories

| | | Description |
|---|---|---|
| **Pre-installation Kit Vento Expert A50-1 S** |  | Pre-installation kit for mounting into a thin wall.<br>**Includes:**<br>· Air duct<br>· AH-S chrome 160 outer ventilation hood<br>· Plastic foam plug<br>· Plastic foam wedges |
| **Completion Kit Vento Expert A50-1 Pro V.2** |  | Final mounting kit.<br>**Includes:**<br>· Cartridge with a heat exchanger, a fan and G3 filters<br>· Indoor unit with a controller and shutters<br>· Remote control |
| **FP2 Vento G3** |  | G3 filters (2 pcs.) |
| **AH-10 chrome 160** |  | Plastic outer ventilation hood with a plate with brushed stainless steel effect finish |
| **AH-11 *colour* 160** |  | Plastic outer ventilation hood.<br>Available in colours: white, black, grey, terra-cotta, brown, vintage |
| **AH-S chrome 160** |  | Outer ventilation hood for thin wall made of brushed stainless steel |
| **AH-S grey 160** |  | Outer ventilation hood for thin wall, painted grey |
| **PP 160/0.5** |  | Outer ventilation hood for mounting from inside |
| **KIT BlauPlast white 160** |  | Kit for angular mounting with white colour grille (for walls with standard thickness) |
| **KIT BlauPlast chrome 160** |  | Kit for angular mounting with stainless steel outer grille (for walls with standard thickness) |
| **FB-Vento Expert** |  | Remote control |
| **CD-1** |  | $CO_2$ sensor with LED $CO_2$ indication and a sensor button for operation mode selection |
| **CD-2** |  | $CO_2$ sensor |



# VENTO ECO A50 C1 L035 S PRO

## HEAT RECOVERY SINGLE-ROOM UNITS

up to **50** m³/h

from **12** dBA

up to **88** %

EC motor



## FEATURES

Arrangement of efficient energy-saving supply and exhaust single-room ventilation in flats, houses, cottages, social and commercial premises.

Air purification with optional F7 filter PM2.5 > 99 %.

Protection from outdoor noise.

Ballanced ventilation regulated air exchange create individually controlled microclimate.

## Designation key

| Model | Air duct | Rated air flow [m³/h] | Cartrige | Duct length | Ventilation hood type | Control |
|---|---|---|---|---|---|---|
| **Vento Eco** | **A:** round air duct | 50 | **C1:** compact monocblock with short heatexchanger | **L035:** 350 mm | **S11:** plastic hood for standard walls<br>**S:** metal hood for thin walls | **Pro:** sensor control panel |

# Design

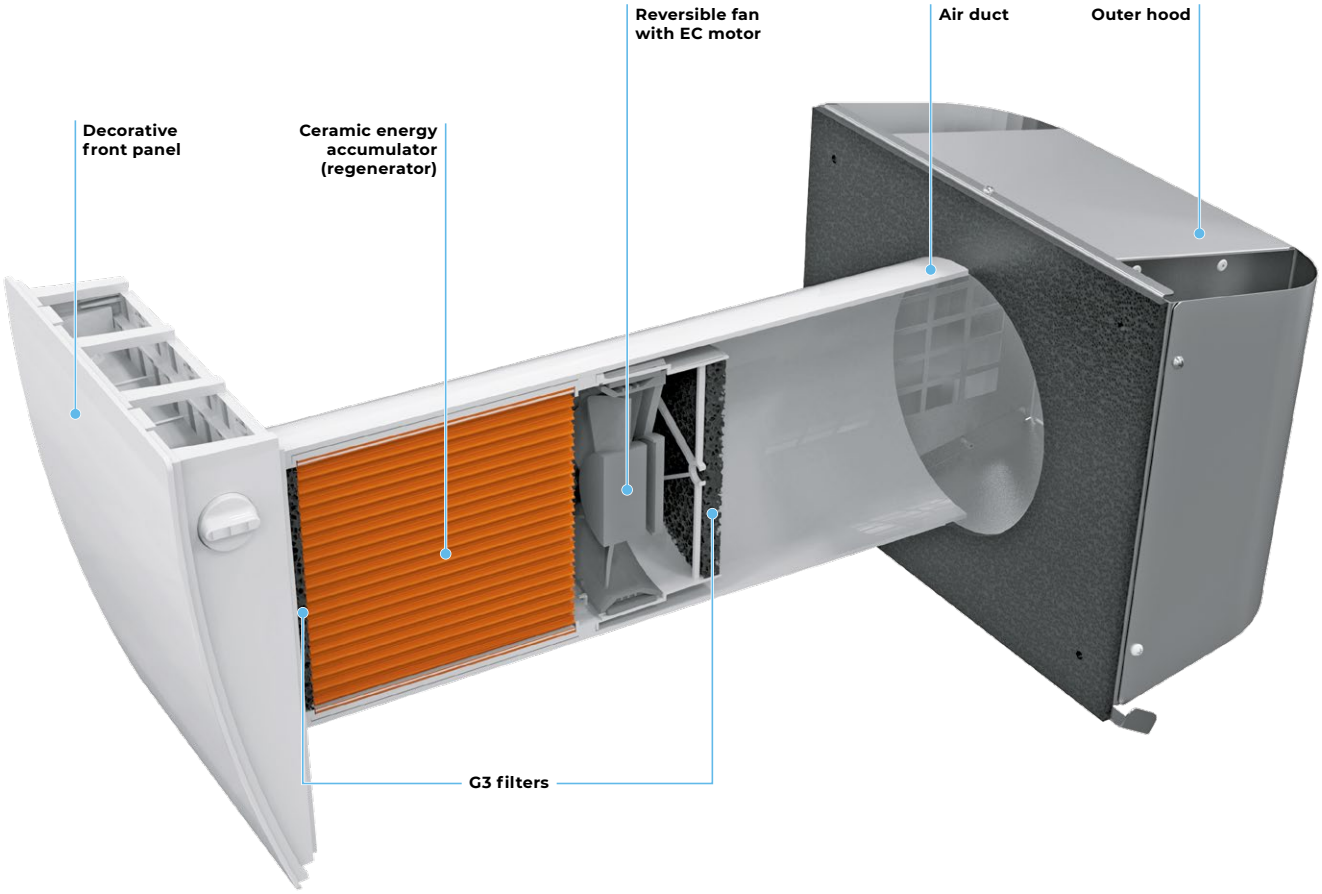


# Heat recovery mode

## UNIT OPERATING LOGIC IN HOT SEASON

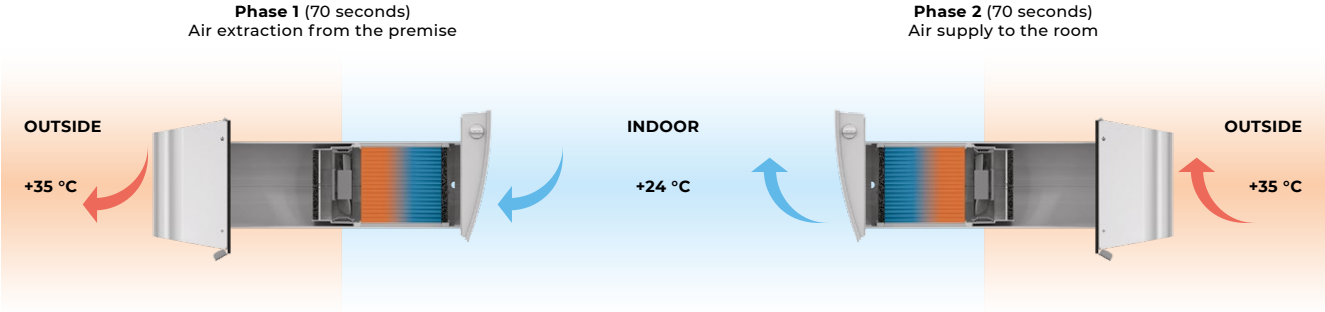


Cool exhaust air is drawn out of the room, reducing the temperature of the ceramic regenerator. As the ceramic regenerator gets cooled down, the unit switches to the supply mode.

Clean hot intake air flows through the regenerator accumulating heat in its mass. When the ceramic regenerator is warmed up, the unit switches to the extract air mode.

## Control

Control of the unit operation mode is performed by means of the sensor control panel.

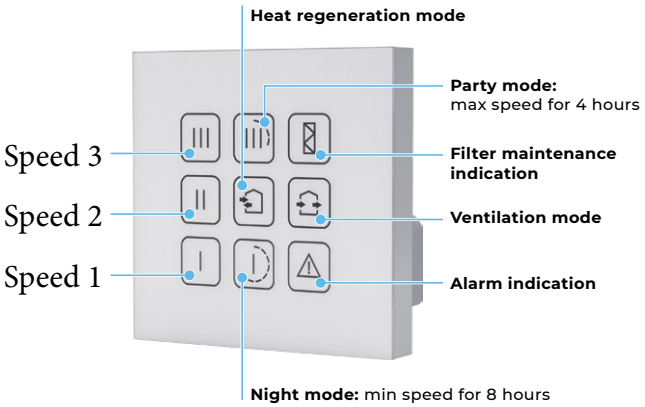


One control panel with sensor buttons can control up to two units.

Low voltage (12 V) power supply between control panel and Vento Eco units.

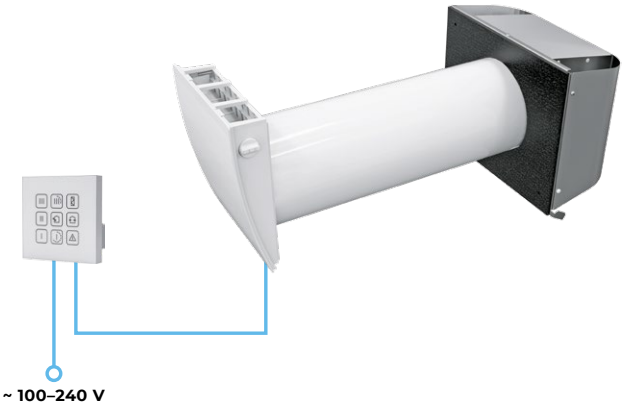


## Mounting

The unit is designed for through-the-wall installation inside a prepared hole in an outer wall of the building.

One unit is able to ventilate a room up to 25 m². For bigger rooms two or more units must be installed.

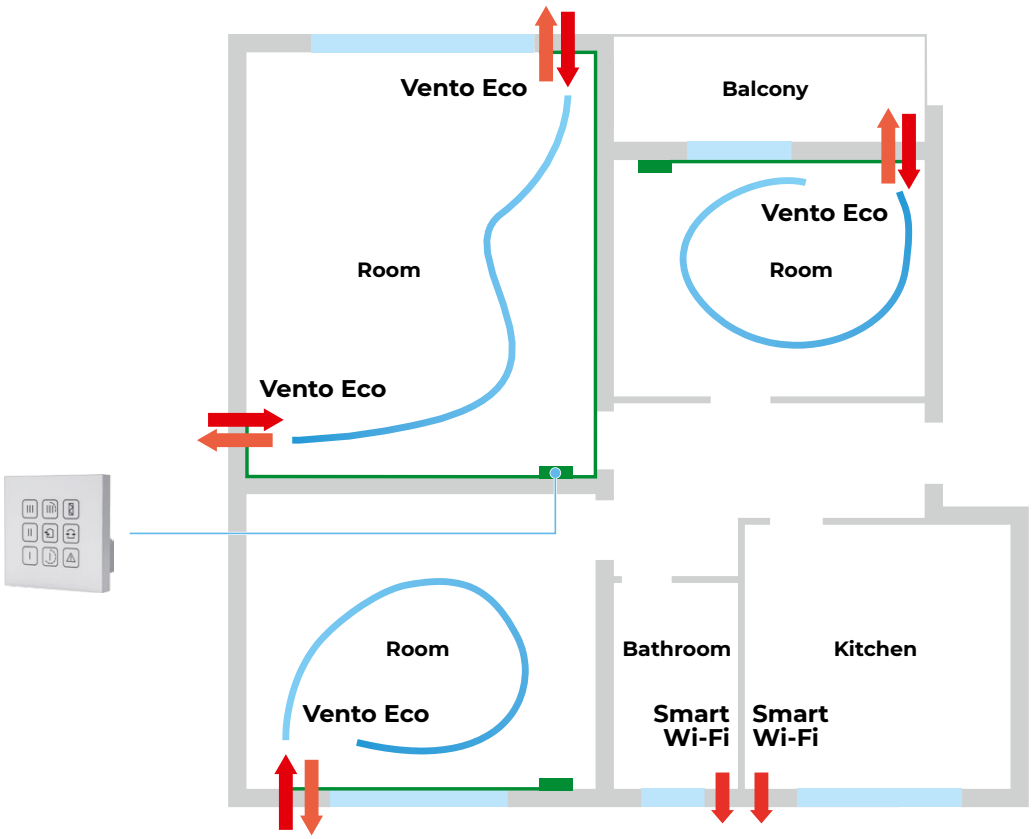

## Dimensions [mm]

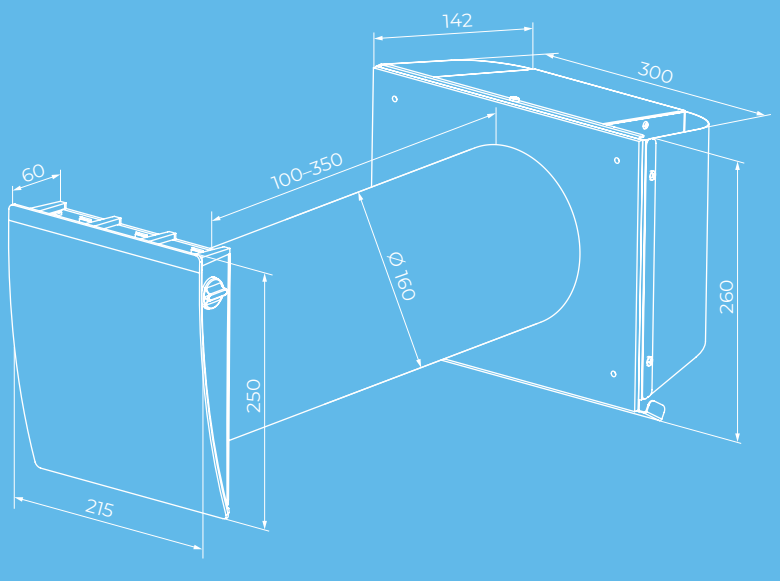


## Technical data

| Parameters | Vento Eco A50 C1 L035 S Pro | | |
|---|---|---|---|
| **Speed** | I | II | III |
| **Voltage [V / 50 (60) Hz]** | 100–240 | | |
| **Power [W]** | 1.00 | 2.10 | 4.30 |
| **Current [A]** | 0.017 | 0.025 | 0.041 |
| **RPM [min$^{-1}$]** | 915 | 1555 | 2330 |
| **Air flow in ventilation mode [m³/h (l/s)]** | 15 (4) | 30 (8) | 50 (14) |
| **Air flow in heat recovery mode [m³/h (l/s)]** | 8 (2) | 15 (4) | 25 (7) |
| **SFP [W/l/s]** | 0.48 | 0.50 | 0.62 |
| **Transported air temperature [°C]** | -20...+40 | | |
| **Temperature exchange efficiency (heating) [%]** | 88 | 81 | 74 |
| **Temperature exchange efficiency (cooling) [%]** | 87 | 85 | 80 |
| **Enthalpy exchange efficiency (heating) [%]** | 88 | 77 | 66 |
| **Enthalpy exchange efficiency (cooling) [%]** | 83 | 78 | 63 |
| **Sound pressure level at 1 m according to ISO 3741: 2004 [dBA]** | 21 | 27 | 29 |
| **Sound pressure level at 3 m according to ISO 3741: 2004 [dBA]** | 12 | 18 | 20 |
| **Ingress protection rating** | IP24 | | |

* maximum air flow 40 m³/h

# Accessories

| Description | | |
|---|---|---|
| **Completion Kit Vento Eco A50-4** |  | Indoor grille and cartridge with heat regenerator, fan and G3 filters |
| **ZL1 Vento 160/150** | 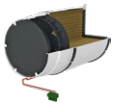 | Cartridge with heat regenerator for cold climate |
| **FP2 Vento G3** |  | G3 filters (2 pcs.) |
| **AH-S chrome 160** |  | Outer ventilation hood for thin wall made of brushed stainless steel |
| **AH-S white 160** |  | Outer ventilation hood for thin wall made of stainless steel, painted white |
| **KIT BlauPlast white 160** |  | Kit for angular mounting with white colour grille (for walls with standard thickness) |
| **KIT BlauPlast chrome 160** |  | Kit for angular mounting with stainless steel outer grille (for walls with standard thickness) |
| **R 160-500** |  | 500 mm air duct and plastic foam plug |
| **R 160-700** |  | 700 mm air duct and plastic foam plug |
| **SE Vento Eco A50 Pro** |  | Sensor control panel |



# FRESHER 50 SHORT S

## HEAT RECOVERY SINGLE-ROOM UNITS

up to **50** m³/h

from **13** dBA

from **3.8** W

EC motor



## FEATURES

Efficient energy saving supply ventilation in flats, houses, cottages, social and commercial spaces.

Coarse and fine filters ensure fresh filtered air supply to premises.

Various operation modes and regulated air exchange create individually controlled microclimate.

Organization of the air supply system with centralized control based on several ventilation units.

## Designation key

| Model | Rated air flow [m³/h] | Cartrige | Duct length | Ventilation hood type | Indoor unit color |
|---|---|---|---|---|---|
| **Fresher** | 50 | **_:** monoblock cartrige with 150 mm F8 filter insert<br>**Short:** split cartrige 80 mm length holder with 50 mm F7 filter insert | **_:** 350 mm<br>**L05:** 500 mm | **_:** white plastic hood AH-10 white 160 (for standard walls)<br>**S:** metal hood (for thin walls) | **BLK:** mat black color of indoor unit |

# Design

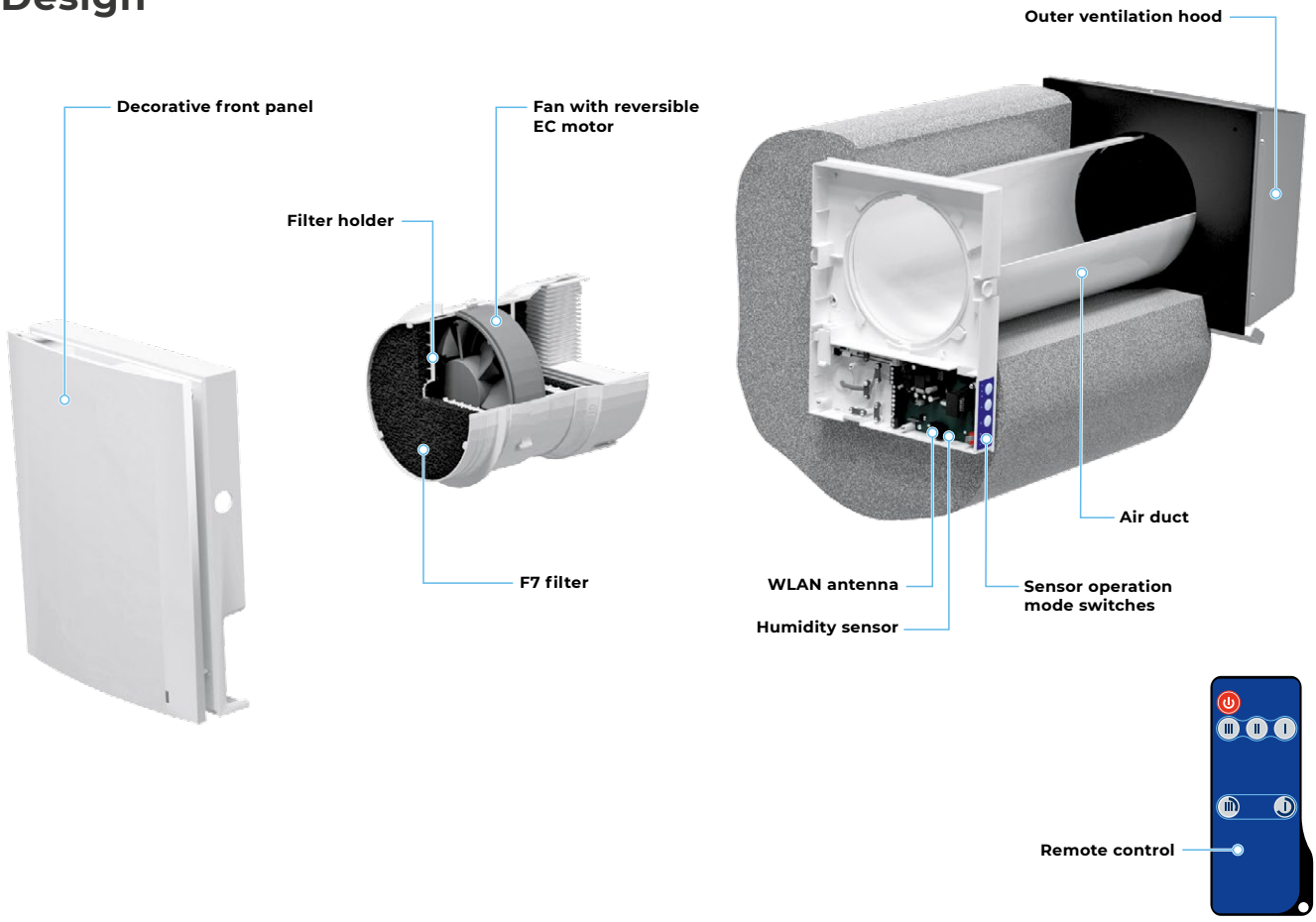




Easy maintenance. The indoor unit can be opened applying a light pressure from both sides



One of the highest air cleaning efficiency ratings on the market through the use of a modern filter system



Integrated automatic air shutters prevent air back drafting



The specially designed front panel can be closed manually to ensure 100 % air tightness and protect against wind impact

# Control

The ventilator can be operated with the sensor control panel on the unit casing or with the remote control (FB Fresher 50).

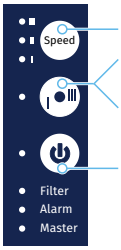


Speed selection

The ventilator switches to the Speed I for 8 hours (Night mode). The indicator lights green

The ventilator switches to the Speed III for 4 hours (Party mode). The indicator lights red

Turning the ventilator on/off

**Remote control**

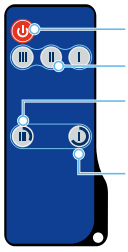

Turning the ventilator on/off

Ventilator speed setting

The ventilator switches to the Speed III for 4 hours (Party mode)

The ventilator switches to the Speed I for 8 hours (Night mode)

The ventilator design enables connecting any external controls, such as a humidity sensor, an external $CO_2$ sensor or a switch. Connection of several ventilators in series provides effective, optimal ventilation. The first unit in series becomes the master unit. Ventilation mode is controlled via the control panel on the master unit. The signal from the remote control is received by the first ventilator (master) only.

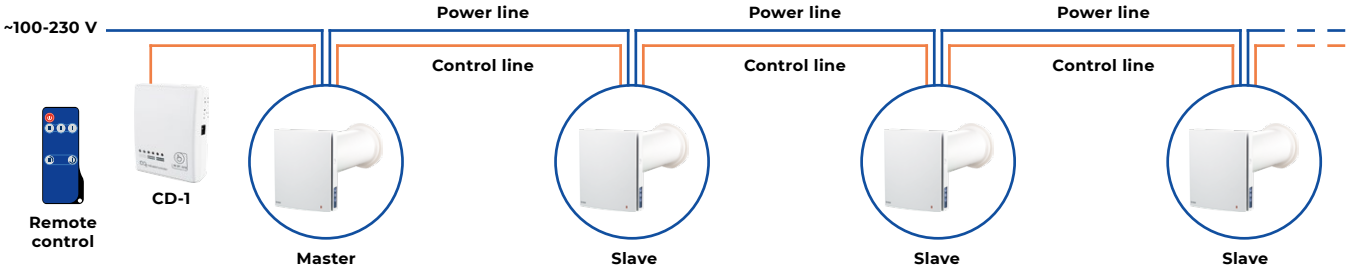


# Mounting

The unit is designed for through-the-wall mounting into a round hole provided in the outer wall. The unit installation in new-construction buildings is carried out in two phases:

Preassembly at the stage of interior and exterior finishing of walls (installing the air duct and the outer ventilation hood, electrical cable laying)

Final assembly – before commissioning the house. It includes installation of the cartridge with the fan and filters as well as installation and connection of the indoor unit with the controller and air shutters.

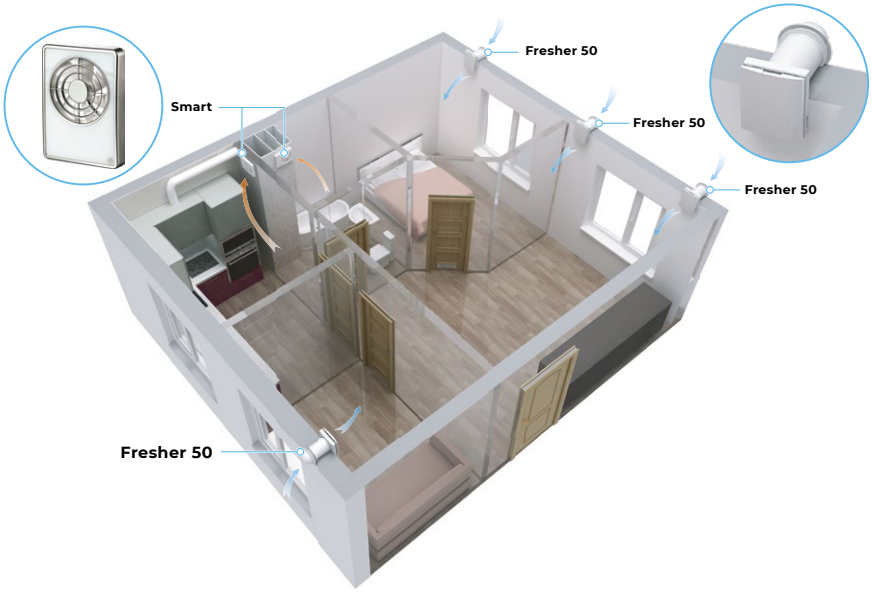

## Dimensions [mm]

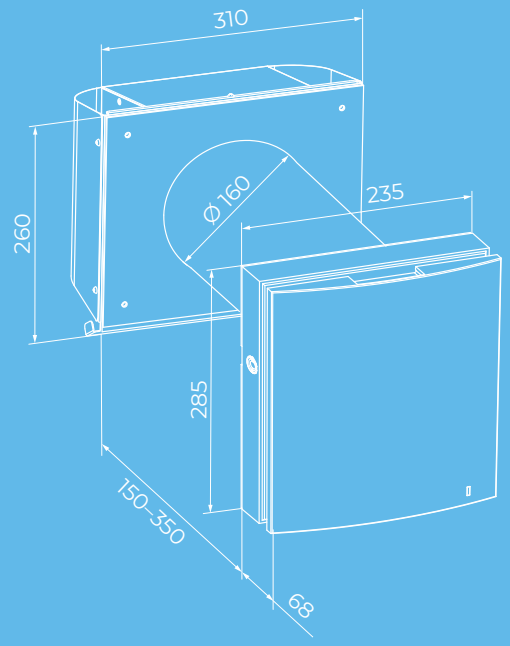


Fresher 50

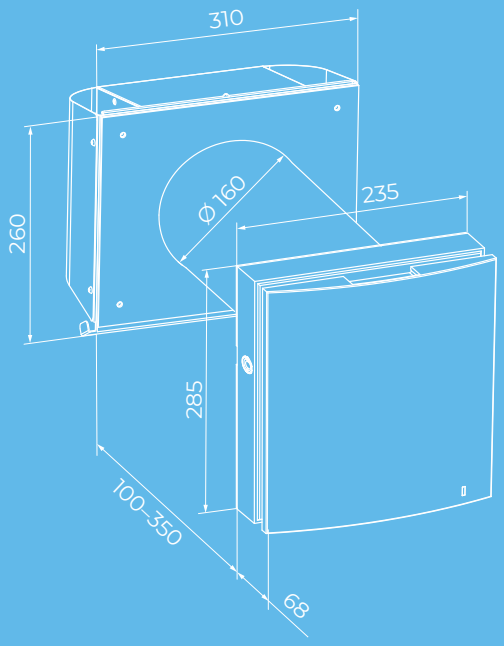


Fresher 50 Short S

## Technical data

| Model | Fresher 50 / Fresher 50 Short S | | |
|---|---|---|---|
| **Speed** | I | II | III |
| **Voltage [V/50 (60) Hz]** | 1~100-240 | | |
| **Power [W]** | 3.8 | 4.7 | 7.4 |
| **Current [A]** | 0.031 | 0.039 | 0.061 |
| **Air flow [m³/h (l/s)]** | 20 (6) | 35 (10) | 50 (14) |
| **SFP [W/l/s]** | 0.68 | 0.48 | 0.53 |
| **Transported air temperature [˚C]** | -30...+50 | | |
| **Sound pressure level at a distance of 1 m [dBA]*** | 22 | 29 | 32 |
| **Sound pressure level at a distance of 3 m [dBA]*** | 13 | 20 | 23 |
| **Outdoor noise attenuation [dBA]** | 41 | | |
| **PM 2.5 removal efficiency [%]** | 98 | | |
| **Ingress protection** | IP24 | | |

* Sound pressure level measured in free space.

# Accessories

| | | Description |
|---|---|---|
| **FP Fresher 50 F8** | 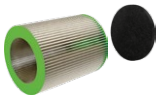 | Filter kit: G3 filter (1 pc) + F8 filter (1 pc) |
| **FP2 Vento G3** |  | G3 filters (2 pcs.) |
| **FPC 150x50 G4** |  | G4 coarse filter |
| **FP2 Vento F7** |  | Filter set.<br>**Includes:**<br>· Plastic filter holder (1 pc.)<br>· F7 fine filter (1 pc.). Filtration rate PM2.5 > 70 % |
| **FB Fresher 50** |  | Remote control |
| **CD-1** |  | $CO_2$ sensor with LED $CO_2$ indication and a sensor button for operation mode selection |
| **CD-2** |  | $CO_2$ sensor |
| **HR-S** |  | Room humidistat |

# AH-S 160

AH-S 160

## STAINLESS STEEL HOODS

white

chrome



## Features

Decoration of supply and exhaust vents of public, residential and industrial ventilation systems.

For outdoor wall mounting of ventilation units placed inside walls under 350 mm thick.

## Design

Made of stainless steel.

High weather resistance.

Non-inflammable.

Compatible with Ø 160 mm air ducts

Equipped with a drip edge to move drops away from the wall.

Inner side of the hood is glued with noise-absorbing polyurethane foam (5 mm layer).

## Modifications

AH-S white 160: stainless steel ventilation hood, painted white.

AH-S chrome 160: brushed stainless steel ventilation hood.

## Technical data

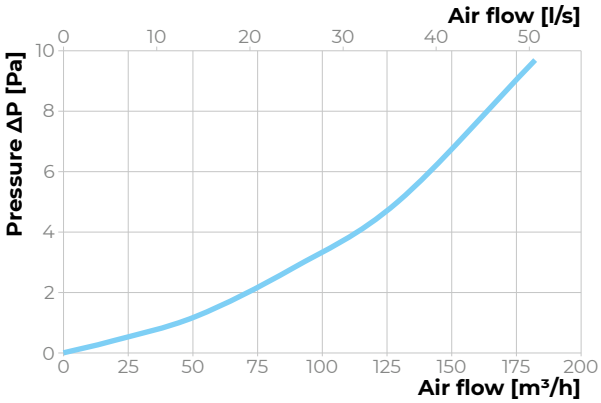


## Dimensions [mm]

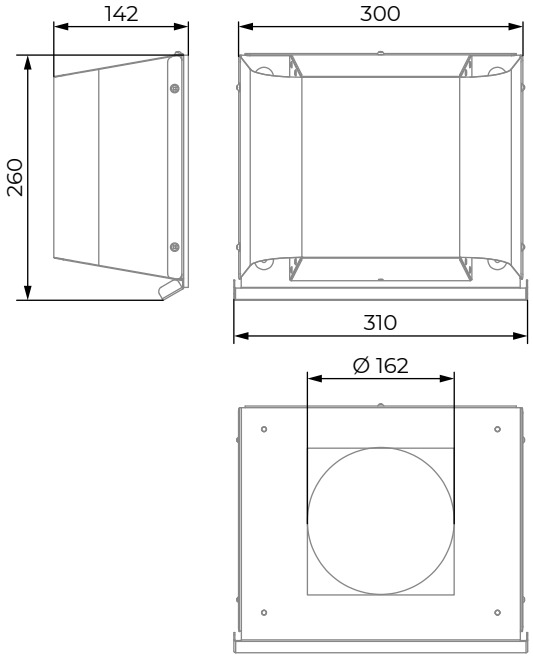



# AH-15 160

AH-15 160

## STAINLESS STEEL HOODS

white

chrome

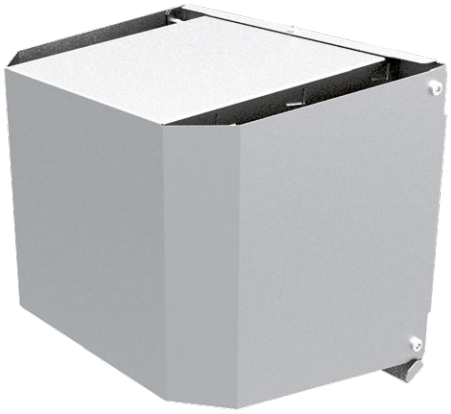

## Features

Decoration of supply and exhaust vents of public, residential and industrial ventilation systems.

For outdoor wall mounting of ventilation units placed inside walls under 350 mm thick.

## Design

Made of stainless steel.

High weather resistance.

Non-inflammable.

Compatible with Ø 160 mm air ducts

Equipped with a drip edge to move drops away from the wall.

Inner side of the hood is glued with noise-absorbing polyurethane foam (5 mm layer).

## Modifications

AH-15 160 white: stainless steel ventilation hood, painted white.

AH-15 160 chrome: brushed stainless steel ventilation hood.

## Technical data

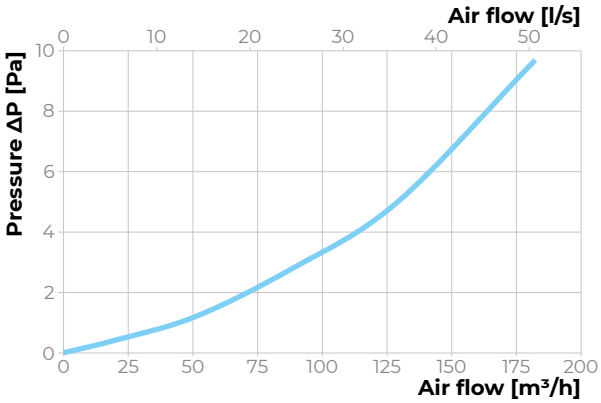


## Dimensions [mm]

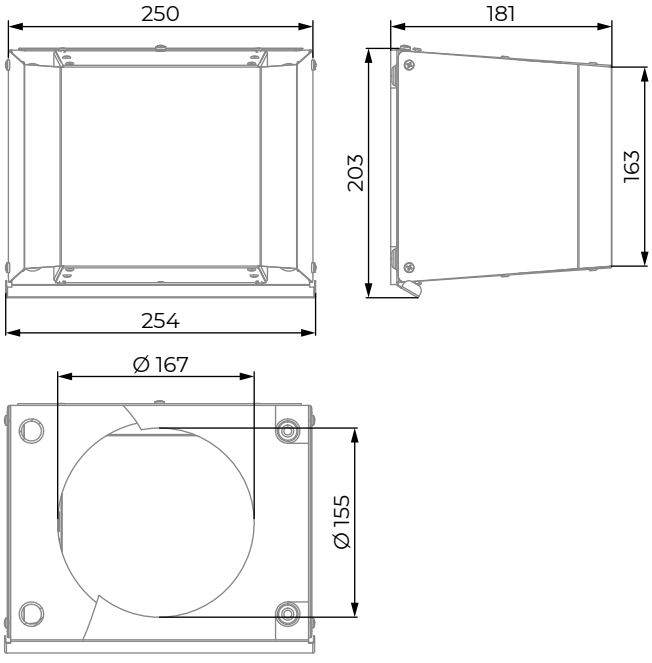

# AH-16 160

## PLASTIC HOODS

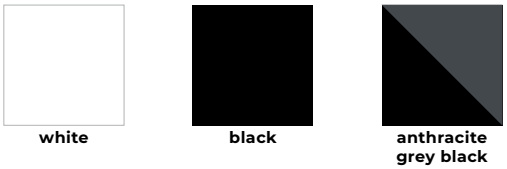




## Features

Decoration of supply and exhaust vents of public, residential and industrial ventilation systems.

For outdoor wall mounting of ventilation units placed inside walls under 350 mm thick.

## Design

Made of PVC.

High UV resistance.

Non-inflammable.

Compatible with ⌀ 160 mm air ducts

Equipped with a drip edge to move drops away from the wall.

Inner side of the hood is glued with noise-absorbing polyurethane foam (5 mm layer).

## Modifications

AH-16 (white).

AH-16 anthracite.

AH-16 black.

AH-16 1 – black incert gird.

## Technical data

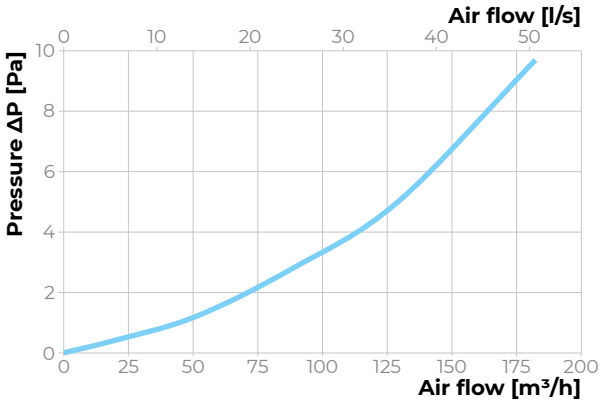


## Dimensions [mm]

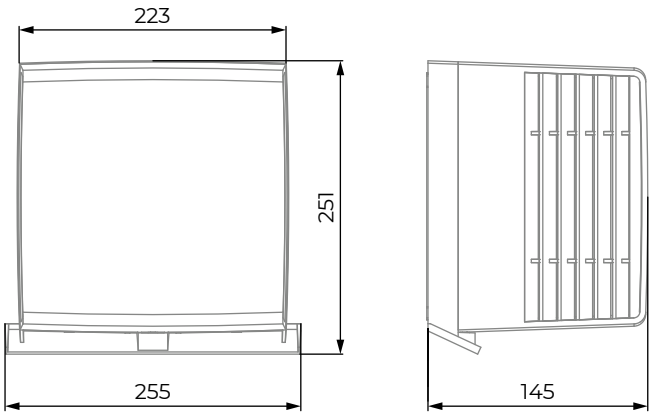

BLAUBERG Ventilatoren



blaubergventilatoren.net

Blauberg Ventilatoren GmbH
Stäblistraße 6
81477 Munich, Germany
HRB 203341

info@blaubergventilatoren.de

The manufacturer reserves the right to make any changes due to the need for production, without prior notice.

**3|2025**