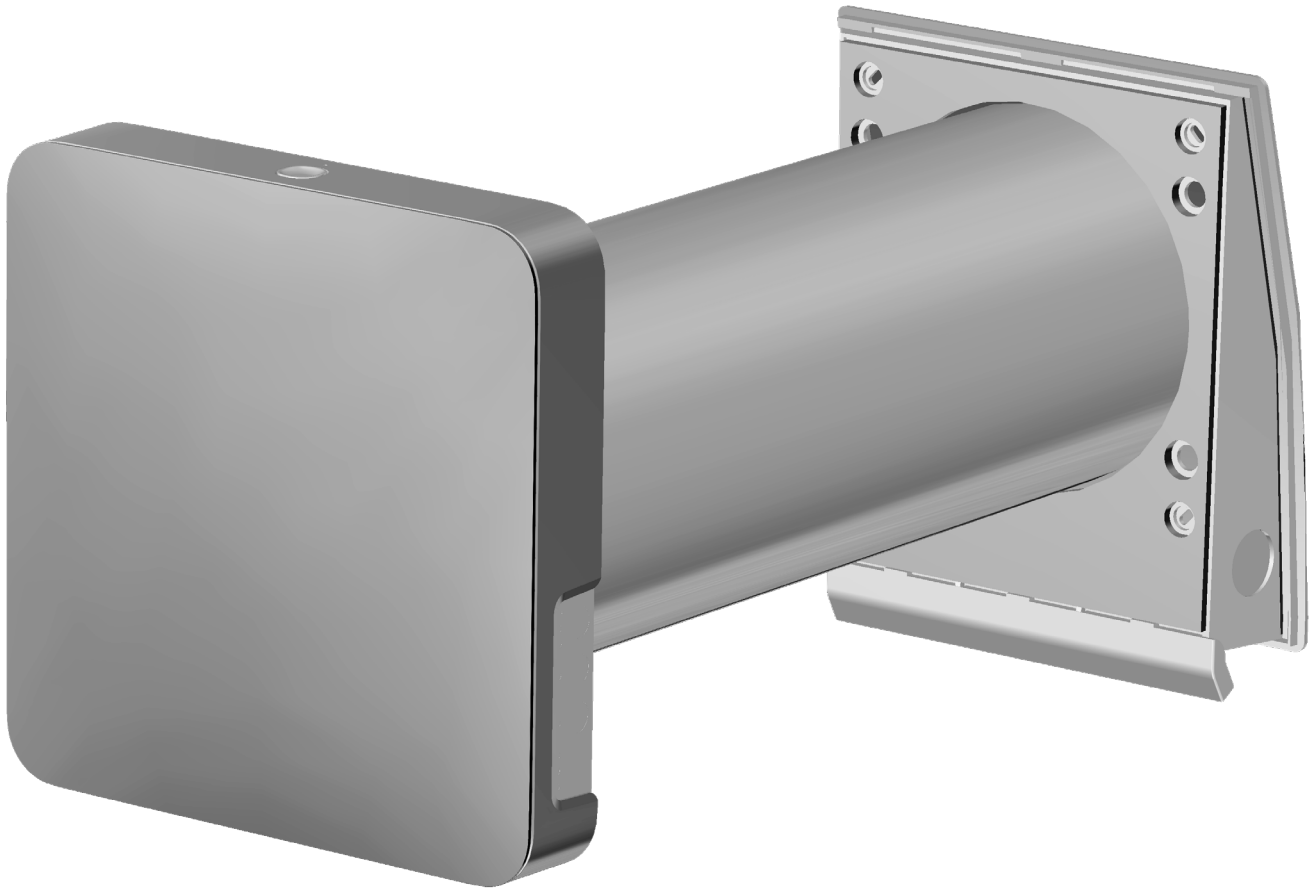

SINGLE-ROOM REVERSIBLE ENERGY RECOVERY VENTILATOR

VENTO inHome Plus
VENTO inHome Plus C1
VENTO inHome Plus W
VENTO inHome Plus C1 W

EN ***USER'S MANUAL***

BLAUBERG

CONTENTS

Safety requirements 2
Purpose 4
Delivery set 4
Designation key 4
Technical data 5
Design and operating principle 6
Mounting and set-up 9
Connection to power mains 14
Technical maintenance 27
Storage and transportation regulations 29
Manufacturer's warranty 30
Certificate of acceptance 31
Seller information 31
Installation certificate 31
Warranty card 31

This user's manual is a main operating document intended for technical, maintenance, and operating staff.
The manual contains information about purpose, technical details, operating principle, design, and installation of the VENTO inHome Plus (C1) (W) unit and all its modifications.
Technical and maintenance staff must have theoretical and practical training in the field of ventilation systems and should be able to work in accordance with workplace safety rules as well as construction norms and standards applicable in the territory of the country.

SAFETY REQUIREMENTS

This unit is not intended for use by persons (including children) with reduced physical, sensory or mental capabilities, or lack of experience and knowledge, unless they have been given supervision or instruction concerning use of the unit by a person responsible for their safety.
Children should be supervised to ensure that they do not play with the unit.
This appliance can be used by children aged from 8 years and above and persons with reduced physical, sensory or mental capabilities or lack of experience and knowledge if they have been given supervision or instruction concerning use of the appliance in a safe way and understand the hazards involved.
Cleaning and user maintenance shall not be done by children without supervision.
Children shall not play with the appliance.

Connection to the mains must be made through a disconnecting device, which is integrated into the fixed wiring system in accordance with the wiring rules for design of electrical units, and has a contact separation in all poles that allows for full disconnection under overvoltage category III conditions.

If the supply cord is damaged, it must be replaced by the manufacturer, its service agent, or similarly qualified persons in order to avoid a safety hazard.

Ensure that the unit is switched off from the supply mains before removing the guard.

Precautions must be taken to avoid the back-flow of gases into the room from the open flue of gas or other fuel-burning appliances.

The appliance may adversely affect the safe operation of appliances burning gas or other fuels (including those in other rooms) due to back flow of combustion gases. These gases can potentially result in carbon monoxide poisoning. After installation of the unit the operation of flued gas appliances should be tested by a competent person to ensure that back flow of combustion gases does not occur.

All operations described in this manual must be performed by qualified personnel only, properly trained and qualified to install, make electrical connections and maintain ventilation units.
Do not attempt to install the product, connect it to the mains, or perform maintenance yourself.
This is unsafe and impossible without special knowledge.
Disconnect the power supply prior to any operations with the unit.
All user's manual requirements as well as the provisions of all the applicable local and national construction, electrical, and technical norms and standards must be observed when installing and operating the unit.
Disconnect the unit from the power supply prior to any connection, servicing, maintenance, and repair operations.
Connection of the unit to power mains is allowed by a qualified electrician with a work permit for the electric units up to 1000 V after careful reading of the present user's manual.
Check the unit for any visible damage of the impeller, the casing, and the grille before starting installation. The casing internals must be free of any foreign objects that can damage the impeller blades.
While mounting the unit, avoid compression of the casing! Deformation of the casing may result in motor jam and excessive noise.
Misuse of the unit and any unauthorised modifications are not allowed.
Transported air must not contain any dust or other solid impurities, sticky substances, or fibrous materials.
Do not use the unit in a hazardous or explosive environment containing spirits, gasoline, insecticides, etc.
Do not close or block the intake or extract vents in order to ensure the efficient air flow.
Do not sit on the unit and do not put objects on it.
The information in this user's manual was correct at the time of the document's preparation.
The Company reserves the right to modify the technical characteristics, design, or configuration of its products at any time in order to incorporate the latest technological developments.
Never touch the unit with wet or damp hands.
Never touch the unit when barefoot.
Do not install or use the product until all construction and finishing work has been completed in the room where it is to be installed.
BEFORE INSTALLING ADDITIONAL EXTERNAL DEVICES, READ THE RELEVANT USER MANUALS.



THE PRODUCT MUST BE DISPOSED SEPARATELY AT THE END OF ITS SERVICE LIFE.

DO NOT DISPOSE THE UNIT AS UNSORTED DOMESTIC WASTE.

PURPOSE

The ventilator is designed to ensure continuous mechanical air exchange in flats, cottages, hotels, cafés and other domestic and public premises. The ventilator is equipped with a heat exchanger that enables supply of fresh filtered air heated by recovering heat from extract air.
The ventilator is designed for installation on outdoor walls.
The ventilator is rated for continuous operation.

DELIVERY SET

Name	Number
Indoor unit of the ventilator	1 pc.
Air duct	1 pc.
Silencer	1 pc.
Fan assembly	1 pc.
Heat recovery unit assembly	1 pc.
Assembled cartridge	–
Outer ventilation hood	1 pc.
Remote control	1 pc.
Cardboard template	1 pc.
Mounting kit	2 packs
Mounting wedges	1 set
User's manual	1 pc.
Mounting hood installation instruction	1 pc.
Packing box	1 pc.

DESIGNATION KEY

VENTO inHome Plus C1 L035 W BLK

Color
BLK – indoor unit color – black

Control system
_ – wired connection between units
W – wireless connection between units

Air duct length
_ – 500 mm
L035 – 350 mm
L – 700 mm
L1.0 – 1000 mm

Regenerator modification
_ – standard regenerator
C1 – trimmed regenerator

Ventilator series
VENTO inHome Plus – is a series of reversible ventilators with a duct diameter of 160 mm and a nominal capacity of 60 m³/h

TECHNICAL DATA

The temperature in the room where the indoor unit of the ventilator is installed must be in the range from +1 ˚C to +40 ˚C with relative humidity up to 65 % (no condensation build-up).
The temperature of the transported air should be in the range from -15 ˚C to +40 ˚C.
If the conditions of use of the ventilator are outside the specified limits, turn off the ventilator.
Provide fresh air supply through windows.
The unit is rated as a class II electric appliance.
Ingress protection rating against access to hazardous parts and water ingress is IP24.
The type of hood supplied and the length of the duct depend on the model of the ventilator (see section Designatioin Key).
The ventilator design is constantly being improved, thus some models may be slightly different from those described in this manual.

OVERALL DIMENSIONS OF THE INDOOR UNIT [MM]

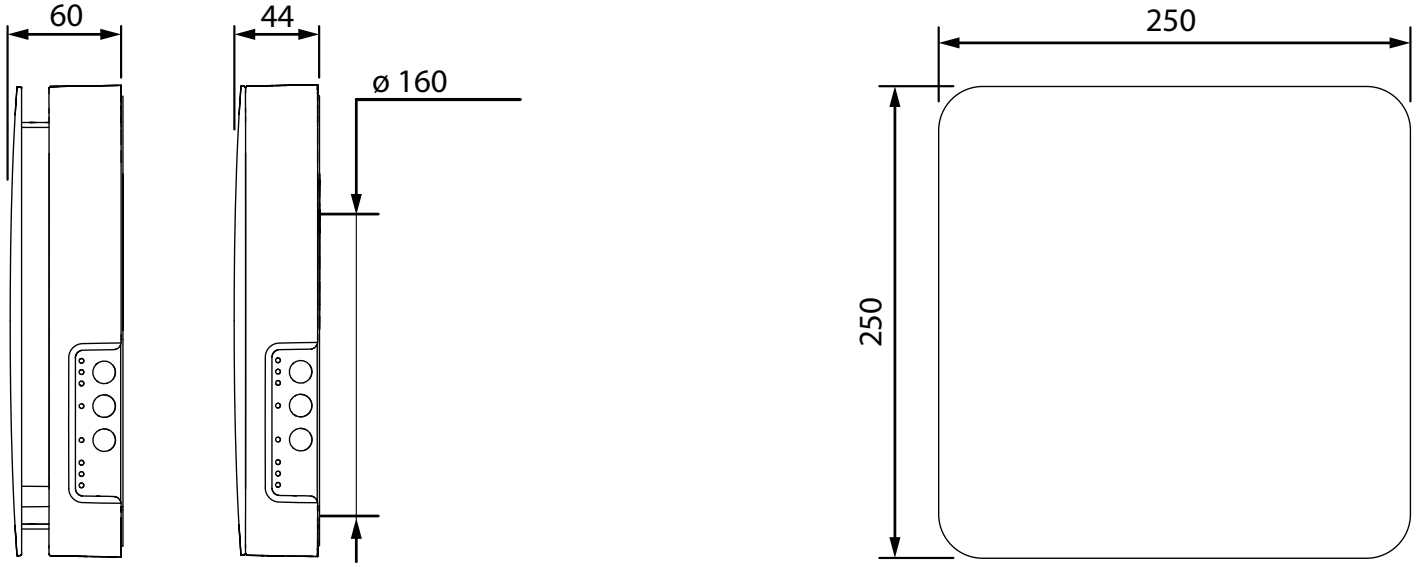

WI-FI TECHNICAL DATA

Standard	IEFE 802.11b/g/n
Frequency band [GHz]	2.4
Transmission power [mW] (dBm)	100(+20)
Network	DHCP
WLAN security	WPA, WPA2

DESIGN AND OPERATING PRINCIPLE

The ventilator consists of an indoor unit with a decorative front panel, a fan unit, a heat exchanger unit, located inside the air duct and the outer ventilation hood.
Two filters are located inside the air duct in the airflow path to provide coarse air purification and prevent dust and foreign objects from entering the heat exchanger and the fan.
In the bottom right corner of the front panel of the ventilator, there is a window for the IR remote control receiver combined with a light sensor.
The light sensor controls the brightness of the control panel LEDs.
The LEDs glow brighter during daylight hours and dimmer in the dark.

VENTILATOR DESIGN

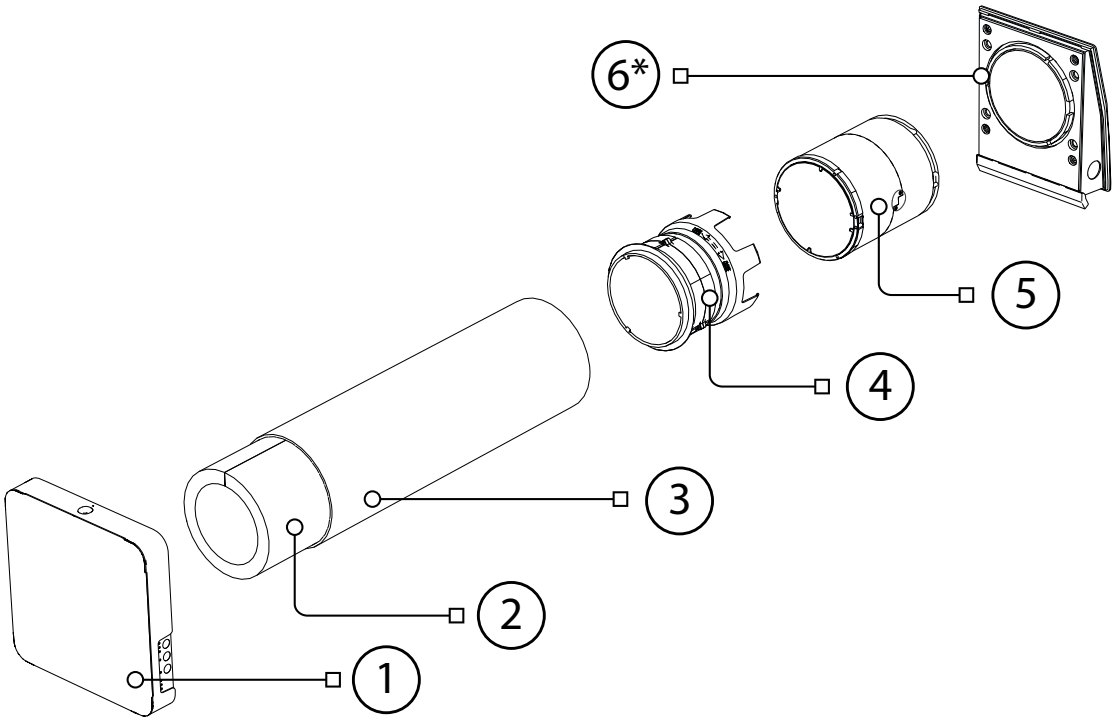

1. Indoor unit.	The design enables to shut off the air duct in case of an extended downtime of the ventilator. Contains a coarse filter on the exhaust air duct, and a control unit.
2. Sound-absorbing material	Reduces the amount of fan noise and outdoor noise entering the room.
3. Plastic air duct.	It is mounted in the wall of the building and serves as a housing for the ventilator's internal components.
4. Ventilation unit	Generates air flow. Contains a fan and a coarse filter.
5. Heat recovery unit	Provides heat recovery while in reverse mode.
6. Outdoor ventilation hood	Prevents ingress of water and foreign objects into the ventilator.

* in all pictures of this manual, an AH-10 hood is depicted as an example; the ventilator may be delivered with different hood models.

Operating principle of shutters

The indoor unit of these models is equipped with automatic shutters. During the ventilator operation the automatic shutters are opened and let the air flow freely through the ventilator. The automatic shutters take 2 minutes to close upon the ventilator shutdown. The process of opening and closing the shutter can take up to five minutes.

WARNING! The product is equipped with a shutter lock (item 1). In the event of a power failure, the product shuts down but the shutters remain open.

If necessary, you can close the shutters. To do this, remove the front cover and press the push rod (item 2) in the direction of the arrow. This releases the push rod and the shutters close.

The product is equipped with a shutter position sensor. When power is restored, the sensor detects the position of the shutters and opens them if the product has been running or closes them if the product has not been running.

The shutter opening/closing mechanism operates with a delay of 1 to 5 minutes after the unit is switched on or off.

The figure below shows the position of the shutters in the closed and open positions.

The shutters are opened

The shutters are closed

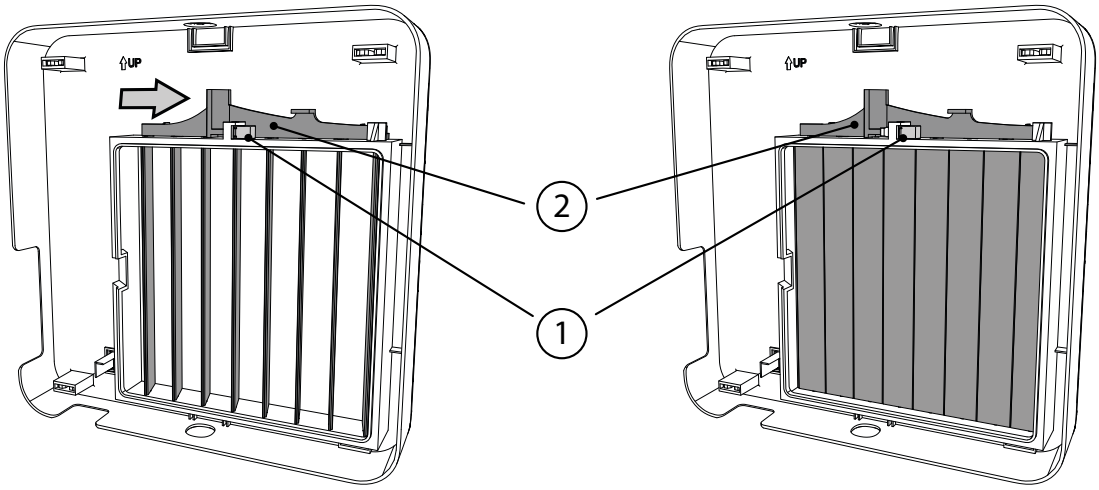

Opening/closing the airflow

To open the air duct, gently pull the front panel towards you with both hands. The fan starts operating according to the actual speed setting.

To close the air duct, gently press down on the front panel until the air duct is completely closed. The fan turns off automatically. The unit functionality is not changed.

Opening the air duct

Closing the air duct

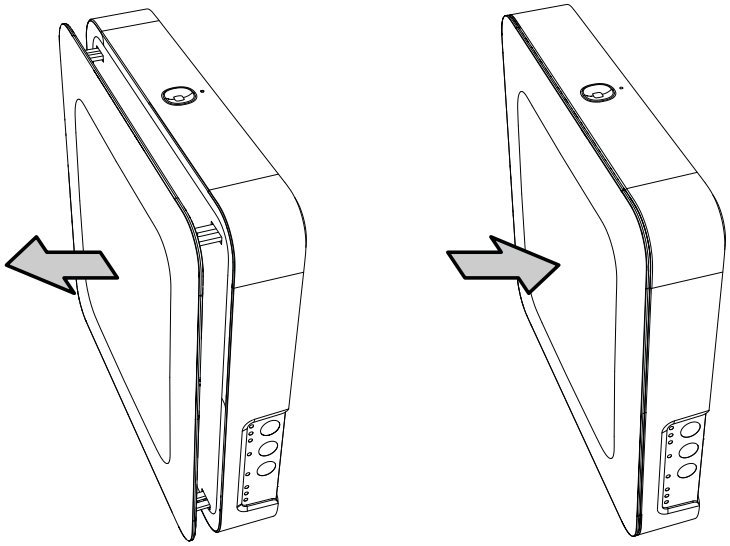

VENTILATOR OPERATION MODES VENTO INHOME PLUS

Ventilation: the ventilator runs either in the air exhaust or air supply mode at a set speed.

In this mode some of the ventilators in the network run in the air supply mode and the other ones in air exhaust mode, depending on the position of the DIP switch No. 3 (**See section Adjusting the operating mode of the ventilator with DIP-switches**).

Air supply: the ventilator operates in the air supply mode irrespective of the position of the DIP switch No. 3 (**see section Adjusting the operating mode of the ventilator with DIP-switches**).

Boost: the ventilator goes to the maximum speed without changing the operation mode.

Regeneration: the ventilator runs in two cycles, 70 seconds each, with heat and humidity regeneration.

Cycle I. Warm stale air is extracted from the room and flows through the ceramic regenerator, which gradually absorbs heat and humidity. In 70 seconds, as the ceramic regenerator gets warmed, the ventilator is switched to supply mode.

Cycle II. Fresh intake air from outside flows through the ceramic regenerator, absorbs accumulated moisture and is heated up to the room temperature. In 70 seconds, as the ceramic regenerator gets cooled down, the ventilator is switched to air extraction mode and the cycle is renewed. If two ventilators are installed, they operate with opposite rotation directions in this mode. While one ventilator supplies air, the other one extracts it.

The ventilators are equipped with a humidity sensor and terminals for connecting an external 0-10 V analogue sensor and an external normally open contact (relay sensor). When any of these devices is triggered, the ventilator switches to maximum speed (Boost mode).

When the sensors return to their original position, the Boost mode switch-off delay timer starts.

Relevant sections of the Blauberg Home mobile app allow you to configure the following ventilator settings:
- switch on or off the humidity sensor, 0-10 V analogue sensor, and relay sensor;
- set the triggering threshold for the humidity sensor and the 0-10 V analogue sensor;
- set the Boost mode switch-off delay duration (30 minutes by default);
- set the operation duration under the first speed timer ("Night" mode) (8 hours by default);
- set the operation duration under the third speed timer ("Party" mode) (4 hours by default).

If necessary, you can set different ventilator speeds for different time intervals by day of the week in the "Weekly schedule" section of the Blauberg Home mobile app. For the week schedule to work correctly, you need to set the current date and time correctly in the "Date and Time" section.

When simultaneously activating several operation modes that exclude each other, the ventilator selects the mode according to the following priority:
1. The Night mode timer or the Party mode timer.
2. Standby.
3. Boost.
4. Weekly schedule
5. Standard operation mode.

VENTILATOR OPERATION MODES VENTO INHOME PLUS W

Ventilation: the ventilator runs either in the air exhaust or air supply mode at a set speed.
In this mode some of the ventilators in the network run in the air supply mode and the other ones in air exhaust mode, depending on the position of the DIP switch No. 3 (See section **Adjusting the operating mode of the ventilator with DIP-switches**).
Boost – if the set humidity value is exceeded or the NO contact of the external relay sensor is closed, the ventilator switches to Speed III until the sensors return to their normal state and the Boost mode timer expires.
Regeneration: the ventilator runs in two cycles, 70 seconds each, with heat and humidity regeneration.
Cycle I.
Warm stale air is extracted from the room and flows through the ceramic regenerator, which gradually absorbs heat and humidity.
In 70 seconds, as the ceramic regenerator gets warmed, the ventilator is switched to supply mode.
Cycle II.
Fresh intake air from outside flows through the ceramic regenerator, absorbs accumulated moisture and is heated up to the room temperature.
In 70 seconds, as the ceramic regenerator gets cooled down, the ventilator is switched to air extraction mode and the cycle is renewed.
The interval at which a specific ventilator starts operating depends on the position of DIP switch No. 3.
When installing two or an even number of ventilators, they must be set to operate in opposite phases.
While one ventilator supplies air, the other one extracts it.

When simultaneously activating several operation modes that exclude each other, the ventilator selects the mode according to the following priority:
1. The Night mode timer or the Party mode timer.
2. Standby.
3. Boost.
4. Standard operation mode.

MOUNTING AND SET-UP

READ THE USER'S MANUAL BEFORE INSTALLING THE UNIT.

DO NOT BLOCK THE AIR DUCT OF THE INSTALLED VENTILATOR WITH DUST ACCUMULATING MATERIALS, SUCH AS CURTAINS, CLOTH SHUTTERS, ETC. AS IT PREVENTS AIR CIRCULATION IN THE ROOM.

The figure below shows a schematic layout of the ventilator's internal elements depending on the wall thickness. The ability to mount the ventilator in the wall depends on the length of the internal elements and the required protrusion A.
The length of the internal elements, the diameter of the required opening and the minimum wall thickness in which the ventilator can be installed when using different external ventilation hoods are shown in the table below.

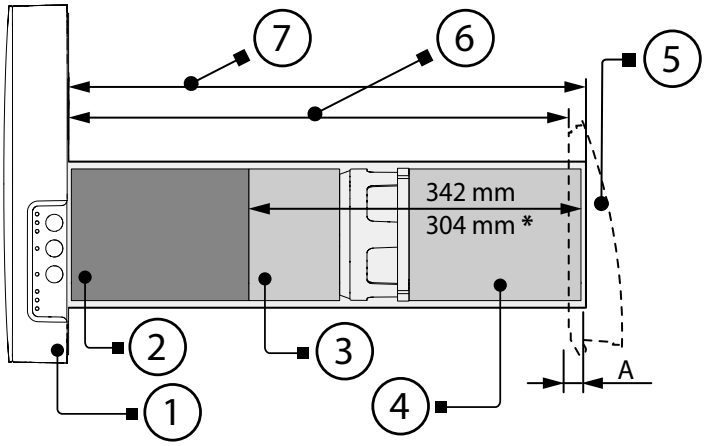

Indoor unit	Outer ventilation hood
Sound-absorbing material	Wall thickness
Ventilation unit	Air duct length
Heat recovery unit	A – The length of the air duct section that can be placed in the hood.

* For the VENTO inHome Plus C1 and VENTO inHome Plus C1 W

Reference dimensions for installation of ventilators	**VENTO inHome Plus VENTO inHome Plus W**	**VENTO inHome Plus C1 VENTO inHome Plus C1 W**
Hole diameter D [mm]	180	180
Length of cartridge or fan and regenerator units [mm]	342	304
Minimum possible wall thickness when using AH, AH-10, AH-8, AH-11, PP 160, hoods [mm]	from 332	from 294
Minimum possible wall thickness when using an AH-S hood [mm]	from 232	from 194

1. Prepare a round core hole in the outer wall.
The figure below shows the minimum distance from the hole to the surrounding objects.
The hole diameter depends on the specific ventilator model. The corresponding values are given in the table.

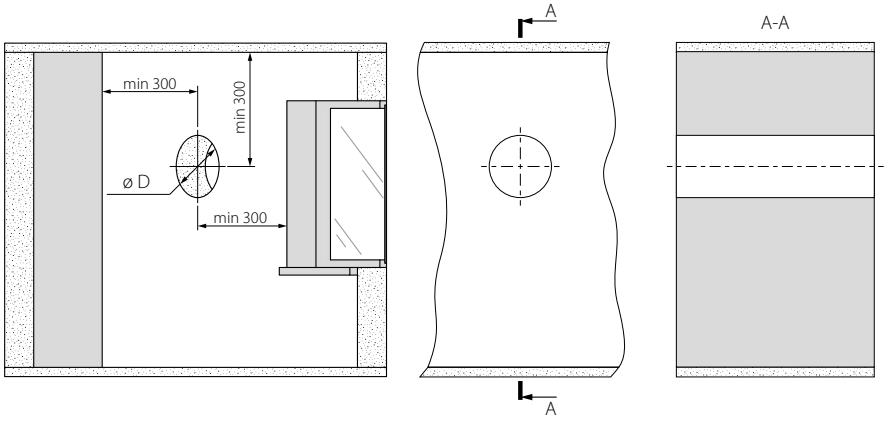

2. Insert the air duct in the wall. For ease of installation use the mounting wedges included in the delivery set. The air duct end must protrude for the distance A that enables installation of the outer ventilation hood. The overall dimensions of the outer ventilation hood, the outside protrusion length of the air duct A and the mounting sequence of the hood are stated in its installation instruction.

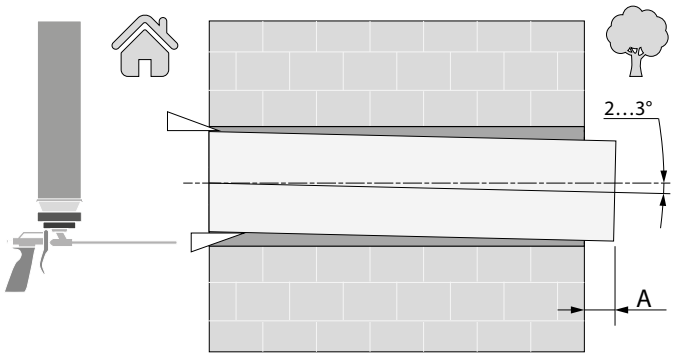

Install the air duct with a minimum slope towards outside.

The air duct can be trimmed by pre-calculating the required length or after fixing the air duct on the wall (in this case, it is necessary to have access to the outside part of the wall).

3. Install the outer ventilation hood. The mounting sequence of the outer ventilation hood is described in the installation instruction for the ventilation hood.

4. Stick the delivered cardboard master plate on the indoor wall using a mounting tape. The large opening in the master plate must be coaxial with the air duct. Align the master plate horizontally with a spirit level.
Then mark the fastening holes for installation of the supplied dowels and drill the holes to a required depth.
Route the power cable from the wall through the marked opening on the template.

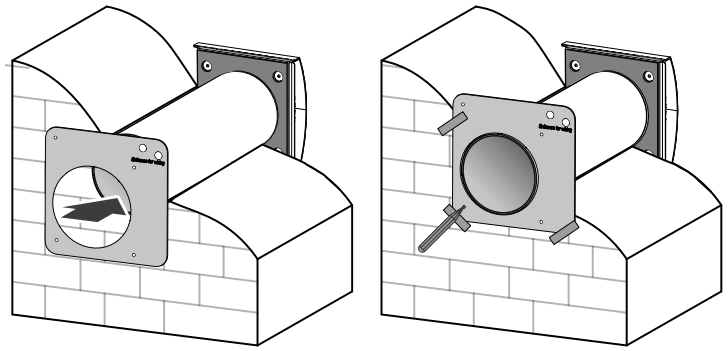

Marking the mounting openings

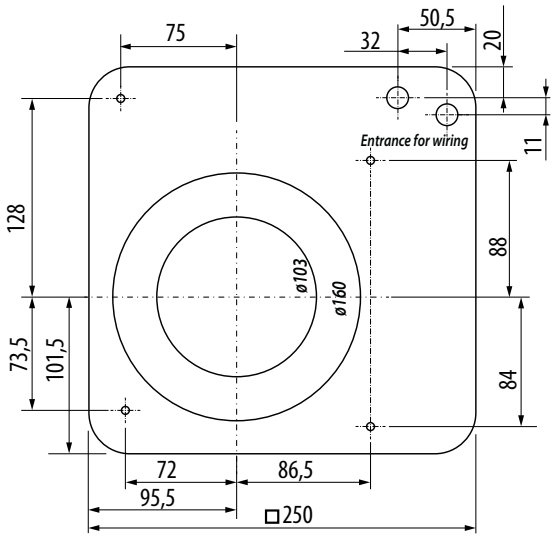

5. Separate the front panel of the indoor unit from its back part. To do this, press the round buttons on the top and bottom of the indoor unit simultaneously, as shown on the left in the figure below.

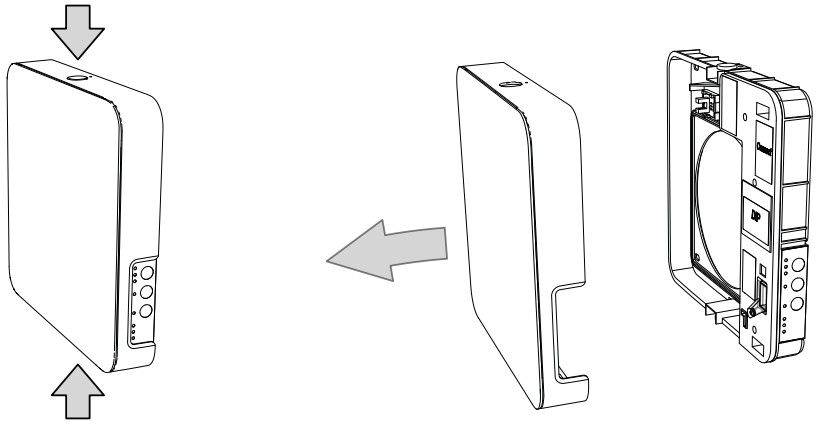

6. Remove the three retaining screws from the controller cover to enable access to the terminals.
Route the power wires through the appropriate cable glands.

VENTO inHome Plus W

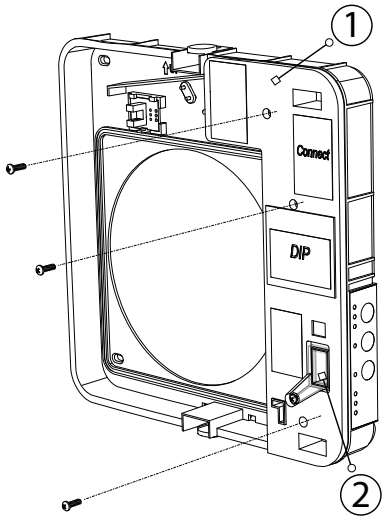

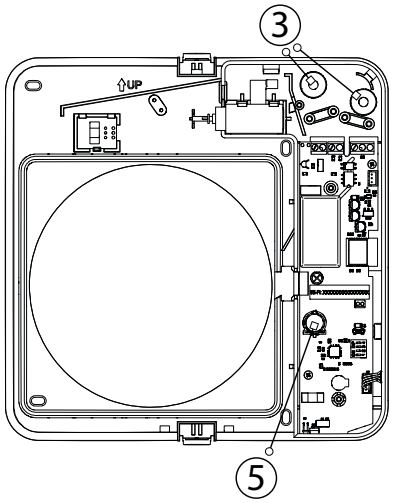

VENTO inHome Plus

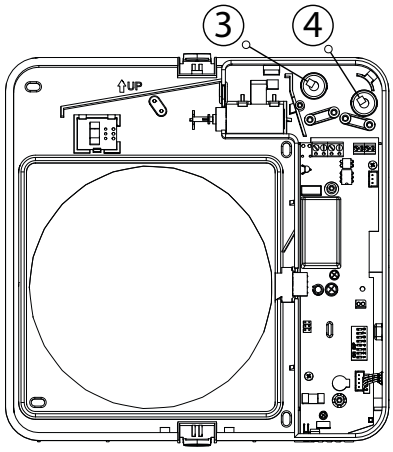

1 – Controller cover. Covers the cable entry points and connection terminals.
2 – Rubber cover. Covers the DIP switches.
3 – Cable glands for power cables.
4 – Cable gland for signal cable.
5 – Battery

7. Fix the back part of the indoor unit on the wall with the screws supplied with the mounting kit of the ventilator.

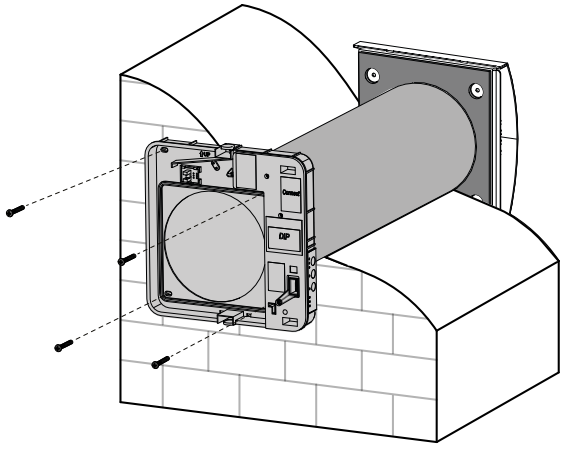

8. Route the power cable as figured below and connect the ventilator to power mains in compliance with the external wiring diagram, see section Connection to power mains. Secure the power cable with the clamp.

VENTO inHome Plus W

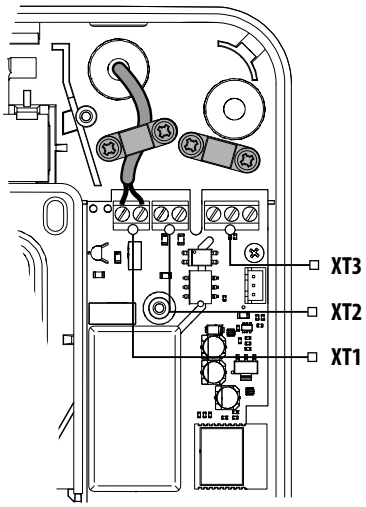

VENTO inHome Plus

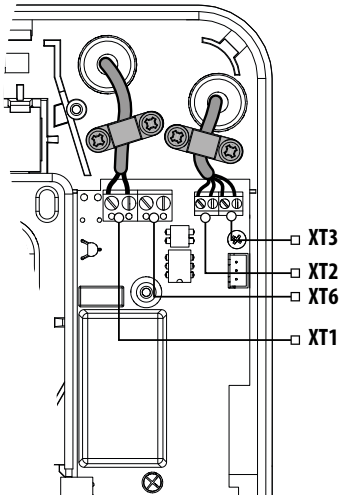

9. After completing the electrical connection reinstall the left cover in site and secure it.

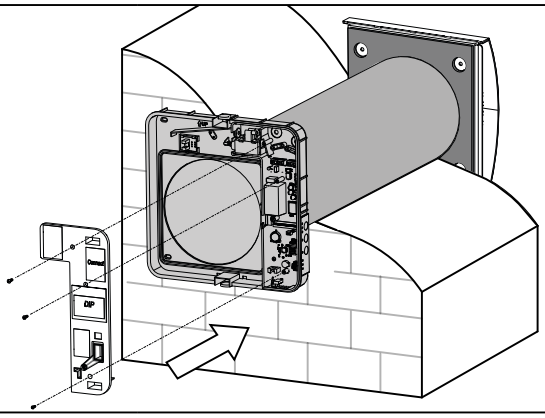

10. Install the cartridge or the regenerator unit and the fan unit into the air duct as figured below and connect the connector to the board as shown by the arrow.

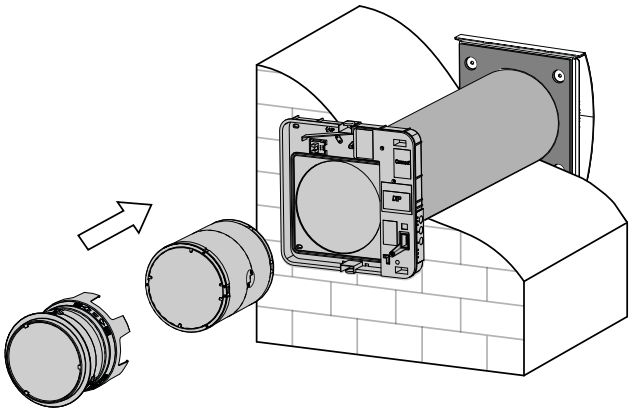

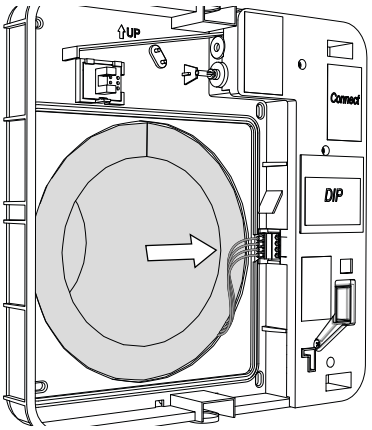

11. Insert the sound-absorbing layer in the air duct. Roll the layer of the sound absorbing material to match the air duct diameter. The protecting paper layer must be facing outward. Insert the sound absorbing roll all the way into the cartridge. Mark the end of the air duct, remove the material and trim the roll as marked. Insert the trimmed sound absorbing roll into the air duct.

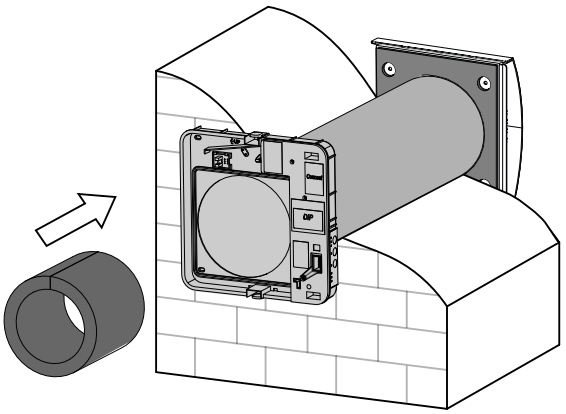

12. Install the front panel of the indoor unit.

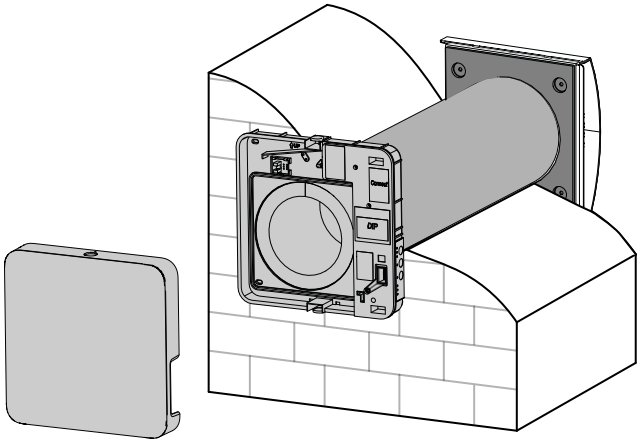

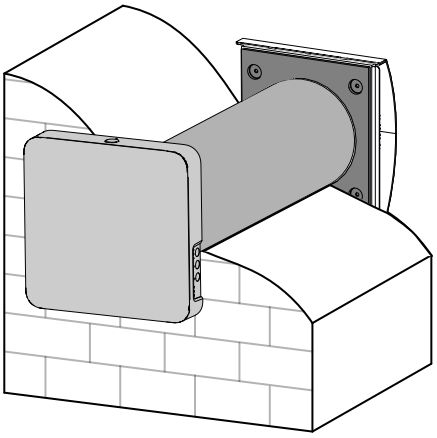

CONNECTION TO POWER MAINS

Connecting and controlling VENTO inHome Plus wired models

The ventilator is rated for connection to single-phase AC 100-240 V/50 (60) Hz power mains.

For electric installations use insulated, flexible conductors (cables, wires) with the minimum cross section of 0.5 up to 0.75 mm² for power cables and 0.25 mm² for sensor cables.

The cable cross section is given for reference only.

The actual conductor cross-section selection must be based on its type, maximum permissible heating, insulation, length and installation method.

Use copper wires for all the electric connections!

Connect the unit to power mains via the terminal block installed in the controller board in compliance with the wiring diagram and terminal designation.

Connect the unit to power mains through the external automatic switch with a magnetic trip integrated into the fixed wiring system.

The tripping current of the circuit breaker is selected based on the electrical characteristics shown on the label of the fan casing.

The ventilator design enables connecting any external controls with a normally opened contact (NO contact), such as an external CO_2 sensor, a humidity sensor, a switch, etc.

When the NO contact of the external device is closed, the unit changes to the maximum speed.

EXTERNAL WIRING DIAGRAM

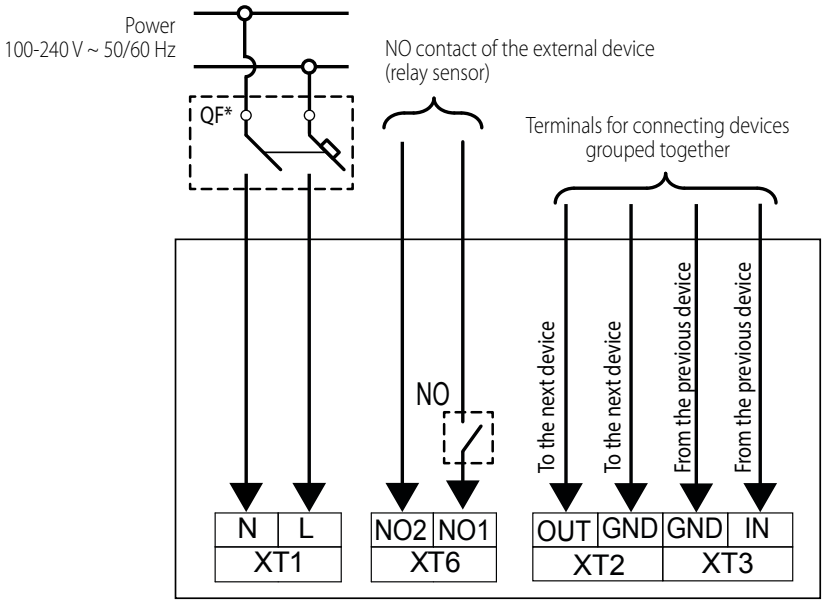

*The circuit breaker its not included in the delivery set.

Grouping ventilators together in a network

To control several ventilators in a coordinated manner, they must be connected to a network.
An example of a possible network connection is shown in the figure below.
Ventilators can be connected in series and in branches (ventilators No. 2 and No. 3 in the figure).
When branching, connect no more than two inputs to a single output.
There can only be one ventilator in the network acting as the Master ventilator (defined as the one with no wire connected to its IN terminal).
Warning! The diagram below illustrates an example of how ventilators can be connected for coordinated control.
In each case, the diagram should be selected based on the relative positions of the ventilators.

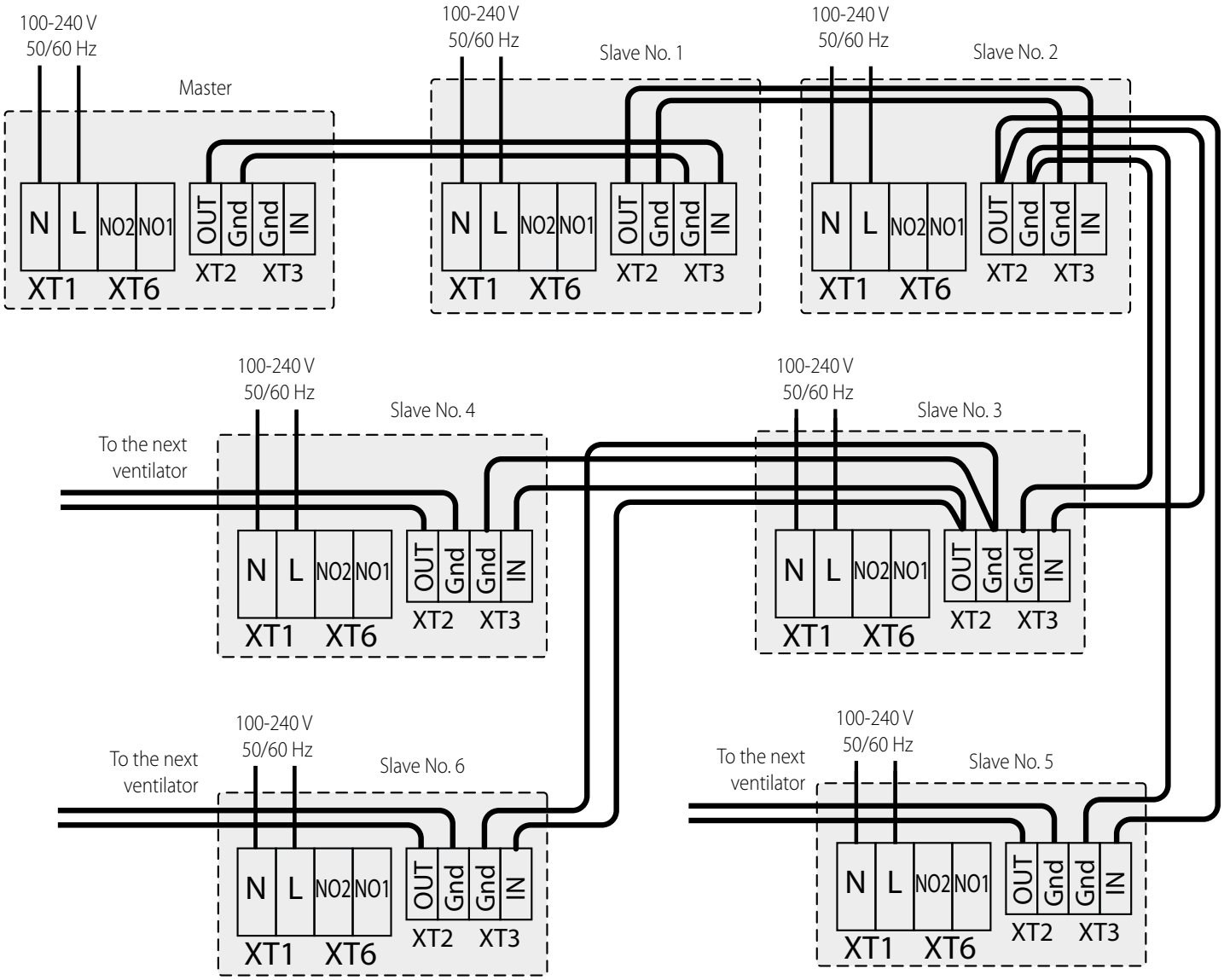

PRE-SETTING OF THE VENTILATOR

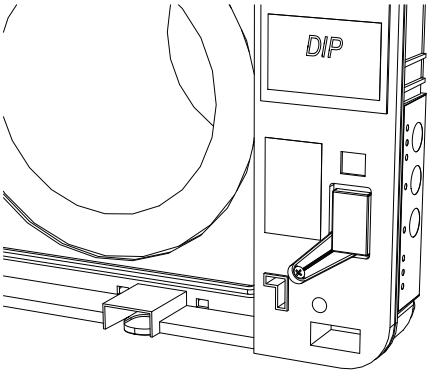

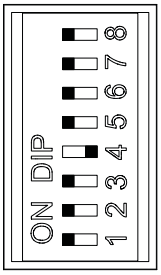

DIP switch under the cover

Prior to operating the ventilator set it up using the DIP switch. It is located on the controller circuit board.

To access the DIP switch, take off the front panel of the indoor unit and uplift the rubber plug that covers the switch.

DIP SWITCH POSITIONS

☐■	1	**The ventilator may be turned off.** In this switch position, the ventilator can be turned off with the button on the side control panel.
■☐	1	**The ventilator may not be turned off.** In this switch position, the ventilator cannot be turned off with the button on the side control panel.

Fan rotation direction.
It is necessary to use an even number of ventilators connected in a single network with a signal cable to ensure balanced ventilation. They must be set up in such a way that one half of the ventilators operate in supply mode, and the other half operate in extract mode.
In Ventilation mode the ventilator supplies the air to the room. In Regeneration mode the ventilator starts operating in supply mode.
In Ventilation mode the ventilator extracts air from the room. In Regeneration mode the ventilator starts operating in extract mode.

☐■	2	In Ventilation mode the ventilator supplies the air to the room. In Regeneration mode the ventilator starts operating in supply mode.
■☐	2	In Ventilation mode the ventilator extracts air from the room. In Regeneration mode the ventilator starts operating in extract mode.

The preset humidity sensor value. The ventilator measures the humidity of the air that is extracted from the room. If humidity exceeds the preset value, the ventilator switches to Speed III. After reaching the necessary air humidity level, the ventilator switches to the preset speed when the turn-off delay timer elapses.

Preset value

☐■	5	Humidity control is disabled	☐■	5	40 %	☐■	5	50 %	☐■	5	60 %	☐■	5	70 %	☐■	5	80 %
☐■	4		☐■	4		☐■	4		☐■	4		☐■	4		☐■	4	
☐■	3		☐■	3		☐■	3		☐■	3		☐■	3		☐■	3	

Delay timer.
The ventilator switches to a higher speed when the humidity sensor or an external device is triggered.
After humidity or other parameters are back to normal, the ventilator switches to the previous operation mode in the preset time.

Delay time

☐■	7	0 min	☐■	7	5 min	☐■	7	15 min	☐■	7	30 min
☐■	6		☐■	6		☐■	6		☐■	6	

Resetting the filter timer.

☐■	8	To reset the filter timer turn on the DIP switch for at least 3 seconds and turn it off.

CONTROLLING THE VENTILATOR

The ventilator is controlled with the remote control or buttons on the lateral face of the indoor unit (see the figure below).
When ventilators are connected in a single network, the controls only impact the first (Master) ventilator.

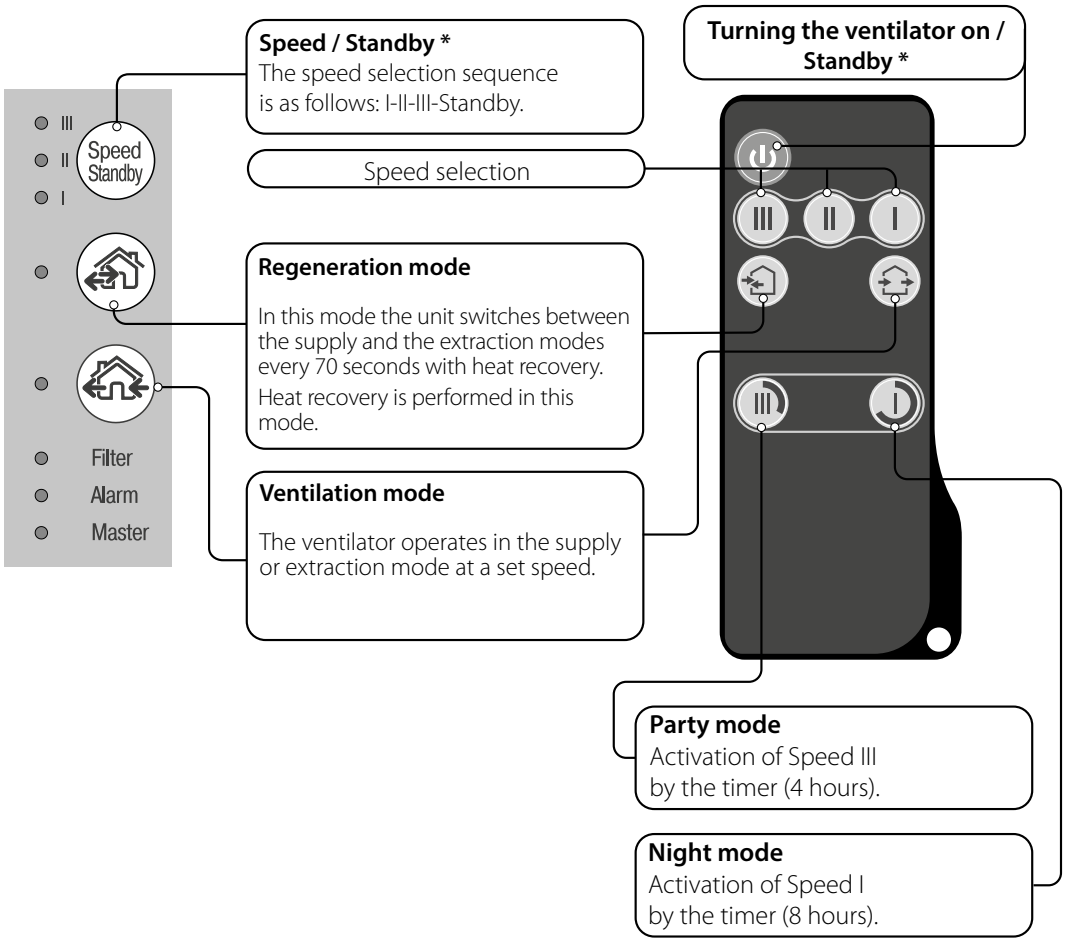

*** Standby** button does not turn the unit off but switches its mode to standby mode only. During maintenance, it is mandatory to turn the unit off.

VENTILATOR CONTROL WITH THE BUTTONS ON THE INDOOR UNIT

The table below shows the buttons and indicators on the indoor ventilator unit with a detailed description of their purpose and functionality.

	**The speed selection sequence is follows: I-II-III Standby.** All ventilators combined into one network run at the speed set by the Master ventilator. I: a steady light indicates operation of the unit at Speed I. A flashing light indicates activation of the Night mode timer. I and I: a steady light of the indicators I and II indicates operation of the unit at Speed II. I, II and III: a steady light of the indicators I, II and III indicates operation of the ventilation unit at Speed III. Flashing lights of the indicators I, II and III indicate activation of the timer in Party mode or the turn-off delay timer in the Boost mode in case of actuation of the connected external sensors or the integrated humidity sensor.
	**Regeneration mode** The rotation direction of both fans changes to opposite every 70 seconds. Heat recovery is performed in this mode.
	**Ventilation mode** The ventilator operates in the supply or extraction mode at a set speed. The direction of air flow depends on the position of the DIP switch.
Filter	**Filter clogging indicator.** 180 days after installation (assuming uninterrupted operation) of the cartridge the filter replacement indicator starts glowing. In this case, clean or replace the filters (see section Technical maintenance). When connecting in series, the Master indicator of the first ventilator is glowing steadily, and the indicator of the ventilator requiring a filter change flashes. To reset the units' filter timer, switch on the DIP switch No. 8 for at least 3 seconds and switch it back off.
Alarm	**Alarm indicator for emergency shutdown of the unit.** When the Alarm indicator of the Master ventilator glows steadily, it indicates a fault in the network of units. Its flashing indicates shutdown of a specific ventilator. In case of an emergency shutdown of a series unit in the network, the defective ventilator's Alarm indicator will flash. All the connected series ventilation units will also stop.
Master	**Master unit indicator.** A steady light indicates the master ventilator in the group (Master). Blinking indicates that the ventilator is a slave ventilator and that there is no communication with the master ventilator. If the indicator is not lit it means that this ventilator is a slave ventilator and is paired with a Master ventilator.

Description of the buttons on the remote control "ON / Standby"

The table below shows the buttons on the remote control with a detailed description of their purpose and functionality.

	**Turning the ventilator on/off.** The ventilator can only be turned off if the ventilator settings enable it. The same button is used to reset alarms (Alarm) and to turn off the timers.
	Ventilator speed selection: Speed III-II-I respectively.
	**Regeneration mode** The rotation direction of both fans changes to opposite every 70 seconds. Heat recovery is performed in this mode.
	**Ventilation mode** The ventilator operates in the supply or extraction mode at a set speed. The fan rotation direction depends on the position of the DIP switch.
	Timer control buttons: **Party mode**: the timer activates operation of the unit at Speed III for 4 hours. **Night mode**: the timer activates operation of the ventilator at Speed I for 8 hours. The ventilation unit reverts to operatng with the previous speed setting as soon as time period elapses. Press any speed setting key to deactivate the timer.

VENTO inHome Plus W WIRELESS CONNECTION OF SEVERAL VENTILATORS

The ventilator is rated for connection to single-phase AC 100-240 V/50 (60) Hz power mains.

For electric installations use insulated, flexible conductors (cables, wires) with the minimum cross section of 0.5 up to 0.75 mm² for power cables and 0.25 mm² for sensor cables.

The cable cross section is given for reference only.

The actual conductor cross-section selection must be based on its type, maximum permissible heating, insulation, length and installation method.

Use copper wires for all the electric connections!

Connect the unit to power mains via the terminal block installed in the controller board in compliance with the wiring diagram and terminal designation.

Connect the unit to power mains through the external automatic switch with a magnetic trip integrated into the fixed wiring system.

The tripping current of the circuit breaker is selected based on the electrical characteristics shown on the label of the fan casing.

The ventilator design enables connecting any external controls with a normally opened contact (NO contact), such as an external CO_2 sensor, a humidity sensor, a switch, etc.

When the NO contact of the external device is closed, the unit changes to the maximum speed.

An analogue sensor with output voltage 0-10 V is may also be connected.

EXTERNAL WIRING DIAGRAM

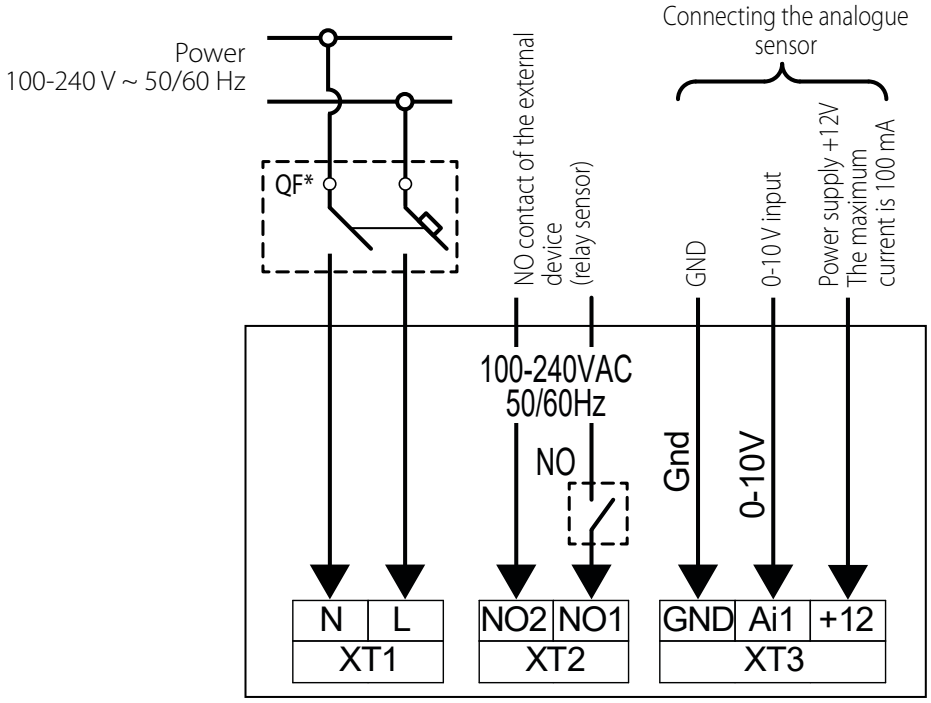

*The circuit breaker is not included in the delivery set.

PRE-SETTING OF THE VENTILATOR

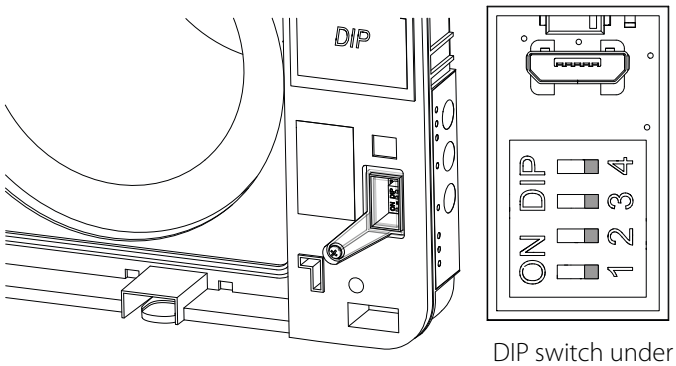

DIP switch under the cover

Prior to operating the ventilator set it up using the DIP switch. It is located on the controller circuit board. To access the DIP switch, take off the front panel of the indoor unit and uplift the rubber plug that covers the switch.

DIP SWITCH POSITIONS

Defining the role of the ventilator when operating in a group

▪	1	ON – slave unit (hereinafter referred to as "Slave unit")
▪	1	OFF – master unit (hereinafter referred to as "Master unit")

Standby mode setup

▪	2	Min – the ventilator operates at Speed I in the **Standby mode**.
▪	2	OFF – the ventilator is switched off in the **Standby mode**.

Setting of the fan rotation direction*

▪	3	ON – in the **Ventilation mode** the ventilator supplies the air to the room. in **Regeneration mode** the ventilator starts operating first in supply mode.
▪	3	OFF – in the **Ventilation mode** the ventilator extracts the air from the room. in **Regeneration mode** the ventilator starts operating first in extract mode.

Restore factory default settings

▪	4	ON – restore factory default settings. To do this, when the ventilator is running, turn the switch to the ON position, after the sound signal, turn the switch to the OFF position.
▪	4	OFF – standard operation of the unit.

*It is recommended to use either one or an even number of ventilators combined into a group to ensure an optimal ventilation mode. The setting is carried out in such a way that during each operation interval one half of the ventilators supplies air to the room, and the other half extracts air out of the room.

The figure below shows the control buttons on the indoor unit and the remote control with a brief description of their function.

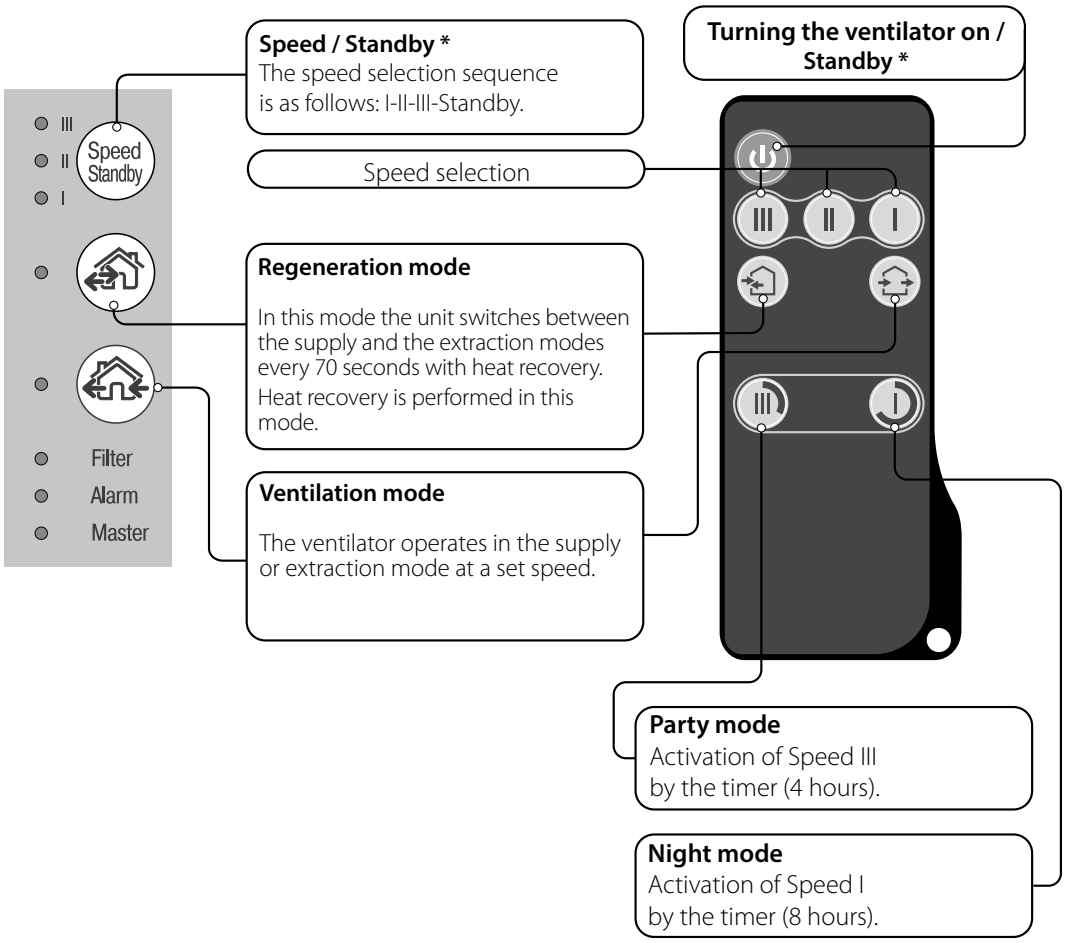

* **Standby** button does not turn the unit off but switches it mode to standby mode only. During maintenance, it is mandatory to turn the unit off.

VENTO INHOME PLUS W VENTILATOR CONTROL WITH THE BUTTONS ON THE INDOOR UNIT

The table below shows the buttons and indicators on the indoor ventilator unit with a detailed description of their purpose and functionality.

Speed Standby	The speed selection sequence is follows: I-II-III-Standby. All ventilators combined into one network run at the speed set by the master ventilator. I: a steady light indicates operation of the unit at Speed I. A flashing light indicates activation of the Night mode timer. I and I: a steady light of the indicators I and II indicates operation of the unit at Speed II. I, II and III: a steady light of the indicators I, II and III indicates operation of the ventilation unit at Speed III. Simultaneously flashing lights of the indicators I, II and III indicate activation of the timer in Party mode or the turn-off delay timer in the Boost mode in case of actuation of the connected external sensors or the integrated humidity sensor. Alternate flashing of the indicators I, II and III indicates that the ventilator runs at the speed set with the mobile application using the slider selector for manual speed setting or that the Weekly Schedule mode is activated.
	**Regeneration mode** The rotation direction of both fans changes to opposite every 70 seconds. Heat recovery is performed in this mode. To enable reverse phase operation of the ventilators, change the position of the DIP switch No. 3.
	**Ventilation mode** The ventilator operates in the supply or extraction mode at a set speed. The direction of air flow depends on the position of the DIP switch 3.
The absence of a light on the "**Regeneration**" and "**Ventilation**" buttons indicates forced operation of the ventilation unit in the air supply mode.	
Filter	180 days after installation of the cartridge the filter replacement indicator starts glowing. In this case, clean or replace the filters (see section Technical maintenance). After replacement of the filters reset the timer using the mobile application or by pressing and holding the  button on the Master ventilator indoor unit for 5 seconds until a signal sounds.
Alarm	Alarm indicator. In case of failure, the **Alarm** indicator on the indoor unit glows or blinks. Reasons of **Alarm** blinking: • Battery charge is below the low level. • No communication between the master ventilator and the router; • Alarm shutdown of the ventilator. If several ventilators are running in a group, in the event of an emergency stop of one ventilator, all the ventilators in the same group will stop (the **Alarm** indicator on the faulty ventilator will blink, while this indicator on the other ventilators will remain lit). If the master ventilator does not communicate with the router for 20 seconds or more, the ventilator will switch to **Standby mode** (the **Alarm** indicator will blink), and the slave ventilators will signal that they are not communicating with the master ventilator (see the description of the **Master** indicator). When communication is restored, the slave ventilators automatically synchronise with the master ventilator.
Master	A steady light indicates the master ventilator in the group (**Master**). Flashing light indicates that the ventilator is a slave ventilator and that there is no communication with the master ventilator. Absence of light indicates that this ventilator is a slave ventilator and is paired with a Master ventilator.
Simulataneous flashing lights of all the indicators on the casing of the ventilator indicates that the Setup mode is enabled.	

REMOTE CONTROL OF THE VENTILATOR

The table below shows the buttons on the remote control with a detailed description of their purpose and functionality.

	ON/Standby. The **Standby** mode depends on the position of the DIP switch 2 (see section DIP switch positions). The same button is used to reset alarms (**Alarm**) and to turn off the timers.
	Ventilator speed selection: Speed III-II-I respectively.
	**Regeneration mode** The rotation direction of both fans changes to opposite every 70 seconds. Heat recovery is performed in this mode. The fan rotation direction depends on the position of the DIP switch 3.
	**Ventilation mode** The ventilator operates in the supply or extraction mode at a set speed. The fan rotation direction depends on the position of the DIP switch 3.
	Timer control buttons:  **Party mode:** the timer activates operation of the unit at Speed III for a set time period, 4 hours by default. The timer setting may be changed during setup of the unit on mobile device.  **Night mode:** the timer activates operation of the ventilation unit at Speed I for a set time period, 8 hours by default. The timer setting may be changed during setup of the unit on mobile device. The ventilation unit reverts to operation with a previous speed setting upon elapse of the set time period. Press any speed setting key to deactivate the timer or press the timer control button once again.

VENTILATION UNIT OPERATION WITH THE BLAUBERG HOME MOBILE APPLICATION

Download the Blauberg Home application and install it on the mobile device.

Blauberg Home – App Store	**Blauberg Home** – Play Market

The ventilator with the factory settings operates as a Wi-Fi access point with the name FAN: + 16 characters of the ID number indicated on the device casing under the front panel.
Wi-Fi access point password: 11111111.
Follow the instructions in the mobile app to connect the device. The app allows configuring the ventilator to connect via your home Wi-Fi network and via a cloud server.

CONTROLLING THE VENTILATOR USING THE SMART HOME SYSTEM

The ventilators are connected to the Smart Home system in accordance with the user manual for connecting to the Smart Home system.

WIRELESS CONNECTION OF SEVERAL VENTILATORS

Ventilators can be combined into a group in which one ventilator shall act as the master and the others shall be connected to it as slaves.

If the ventilator is a **master** ventilator, the slave ventilators and mobile devices connect to it via Wi-Fi. The master ventilator is controlled using a mobile device, remote control or touch buttons on the ventilator casing. The control signal is automatically transmitted to the slave ventilators. In this mode, the device receives signals from sensors (humidity sensor, external discrete sensor, external 0-10 V analogue sensor) and switches to the appropriate operating mode.

If the ventilator is a **slave**, it only receives control signals from the master ventilator. All other signals from other control devices are ignored. In this mode the units ignore any other signals from the sensors. In case there is no connection to the master ventilator for more than 20 seconds, the ventilator shall automatically switch to **Standby** mode.

Sensor-based operation

The ventilator shall only respond to sensor signals when they are acting as a master ventilator.

If any of the sensors is triggered, all ventilators in the group will reach maximum speed.

VENTILATOR WIRELESS CONNECTION DIAGRAMS

Diagram 1

Connection of up to 8 Slave units or mobile devices to the Master unit with its own wireless access point.

In case of connection of 8 Slave units to the Master unit with its own wireless access point a mobile device may not be connected.

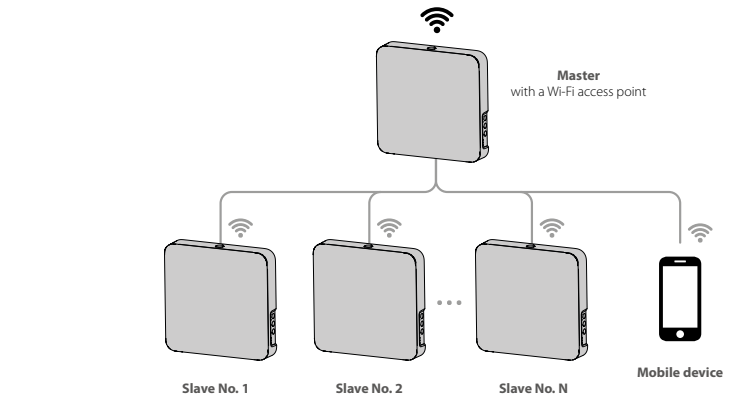

Diagram 2

The Master units, the Slave units and the mobile devices are connected to a wireless access point of the Wi-Fi router. In this case, the Master unit can operate with the number (N) of Slave units, limited by the technical characteristics of the router.

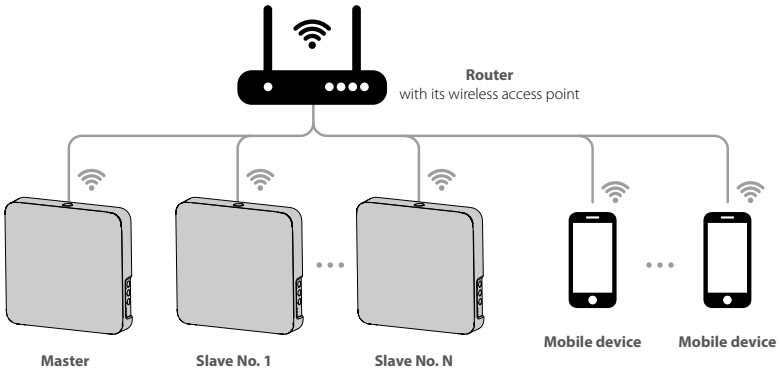

If the Wi-Fi router capacity is not enough to connect a required number of the units, you may use an extra wireless access point to connect the other the unit. Several Master units can optionally be connected to the network for arranging a zone control.

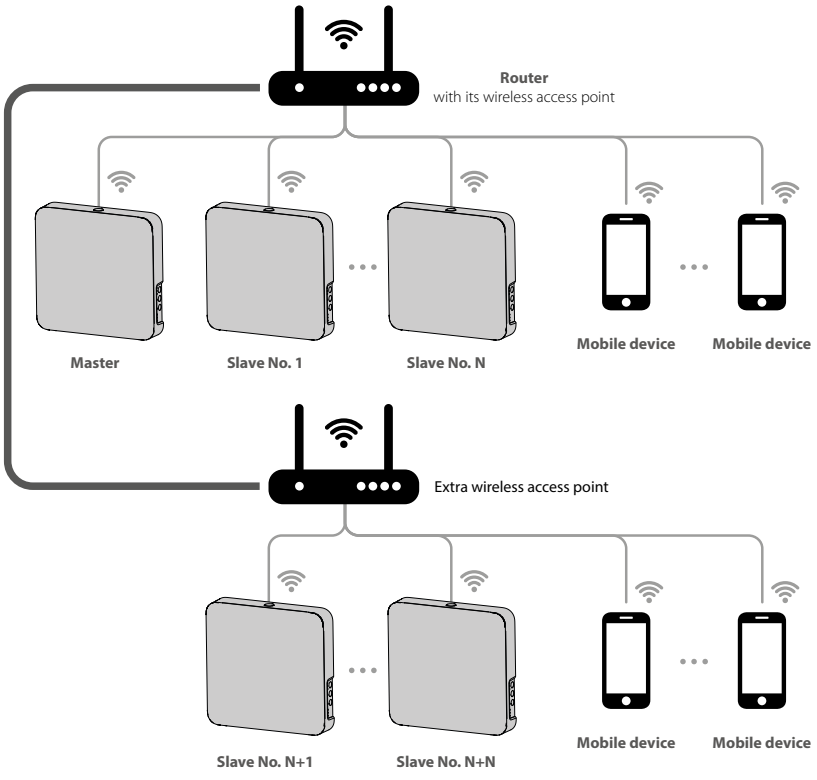

RECOVERY SETUP MODE

In the event of losing the Wi-Fi password or the master ventilator password or in other cases use the recovery Setup mode to restore access to the ventilator functions.

To enter the special Setup mode, press and hold the **Ventilation** button on the ventilator casing for 5 seconds until the beep and blinking of all the LED lights. The ventilator will stay in this mode for 3 minutes, after which it will automatically return to the previous settings. To exit the Setup mode immediately, press and hold the **Ventilation** button on the ventilator casing once again for 5 seconds until the beep and shutdown of all the LED lights.

In this mode the following settings are available for the master ventilator:
- Wi-Fi name: Setup mode.
- Wi-Fi password: 11111111.
- The unit password is ignored.

WHEN SETTING UP THE CONNECTION OF THE DEVICES, IT IS NECESSARY THAT ALL SLAVE VENTILATORS ARE WITHIN THE WI-FI COVERAGE AREA OF THE MASTER VENTILATOR.
AFTER CHANGING THE WI-FI PARAMETERS OF THE MASTER VENTILATOR, RECONNECT THE VENTILATORS

CONNECTING MASTER AND SLAVE VENTILATORS

Follow these steps to create a group of ventilators that are linked as master and slave ventilators:
- Set the DIP switches on each ventilator to the position that corresponds to its role in the group (see "Position of the DIP switch").
- Next, configure the Wi-Fi settings of the master ventilator by following the instructions in the Blauberg Home mobile app.
- Set the master ventilator to the special mode as described above, and all LEDs on the ventilator casing will flash. Repeat the same procedure with the slave ventilators and wait until the slave ventilators beep and the LEDs stop flashing. Switch the master unit back to normal mode. Press and hold the **Ventilation** button. Wait for the beep when all the LEDs stop blinking.

Note: If you have multiple Wi-Fi access points connected to your home router and you want to connect some of the ventilators to one access point and some to another, then
- Connect the Master unit to the first Wi-Fi access point.
- Complete the connection with the first group of Slave units.
- Connect the Master unit to the second Wi-Fi access point.
- Complete the connection with the second group of Slave units.

BATTERY REPLACEMENT

The **Alarm** indicator on the unit casing will flash when the battery is approaching the end of its life.
The mobile app will also display the warning ⚠ and show the following message on pressing the indicator icon.
Low battery power may cause disruptions in the weekly schedule operation. Power off the unit before replacing the battery. After replacing the battery reset the time and date.

The battery is located on the A1 control board. To replace the battery, power off the ventilator, remove the front panel and the cover protecting the control circuit board. Then remove the battery and insert a new one.
The battery type CR1220.

TECHNICAL MAINTENANCE

DISCONNECT THE UNIT FROM POWER SUPPLY BEFORE ANY MAINTENANCE OPERATIONS!

MAKE SURE THE UNIT IS DISCONNECTED FROM POWER MAINS BEFORE REMOVING THE PROTECTION.

Maintenance of the ventilator means regular cleaning of the ventilator surfaces of dust and cleaning and replacement of the filters. To enable access to the main units, follow the procedure described below. The ventilator must be previously turned off using the remote control or the buttons on the indoor unit. Then turn off power supply completely.

1. Remove the front panel of the indoor control unit as shown in section 5 Installation and Set-up.

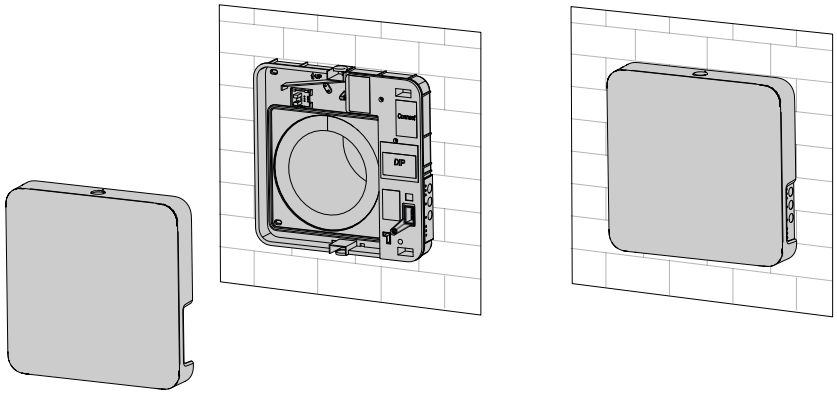

2. Disconnect the connector from the circuit board. Do not remove the connector by pulling the wires. Use a flat screwdriver to uplift it, if required.

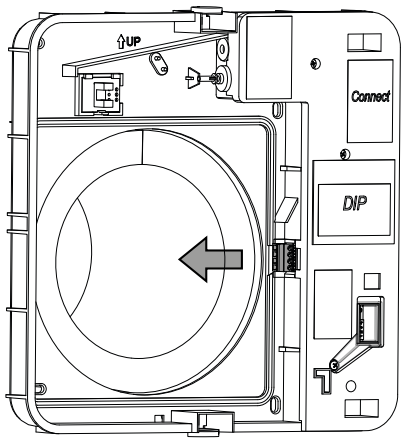

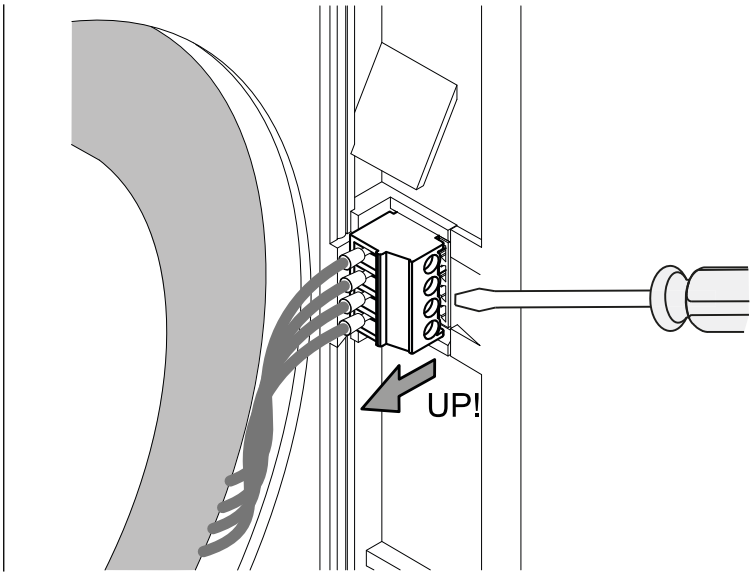

3. Remove the sound-insulation material from the duct, then remove the cartridge or the fan unit and the regenerator unit.

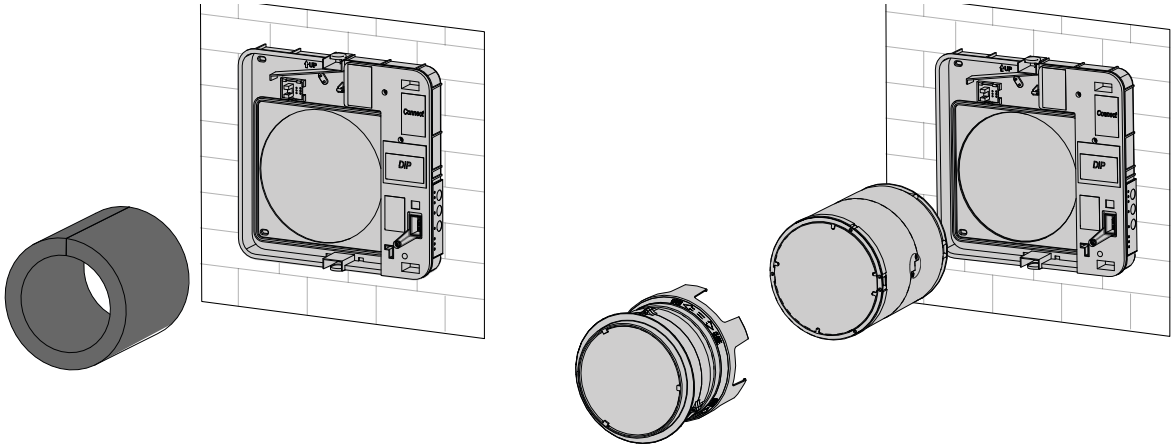

4. Clean filters as they get clogged.
Upon elapse of the set number of days the filter replacement indicator (Filter) starts glowing steadily.
Depending on how dusty the air is, the duration of the ventilator operation until the next filter cleaning may vary.
The duration of the period when the filter replacement indicator is turned on can be set using the mobile app in the range from 70 to 365 days of continuous operation (by default, the Manufacturer's recommended value is set to 180 days).

- Reset the filter timer using the app on your mobile device or using the button on the indoor unit of the ventilator, as described in the Ventilator control with the buttons on the indoor unit section.
- Wash the filters and let those dry out completely.
- Install the dry filters in their place and assemble the unit in the reverse order.
- Vacuum cleaning is allowed.
- The filter service life is 3 years.

Some dust may accumulate on the regenerator and the fan even in case of regular maintenance of the filters.
Subject the regenerator to regular cleaning to ensure high heat recovery efficiency.
Vacuum clean the regenerator not less than once a year.

5. Replacement of the remote control battery (if necessary).

In case of a long-lasting operation of the remote control the battery must be replaced.
No response from the ventilator when pressing the remote control buttons indicates the need to replace the battery.
The battery type is CR2025.
Remove the holder with the battery from the lower part of the remote control.
Replace the battery and install the holder with a new battery back to the remote control.

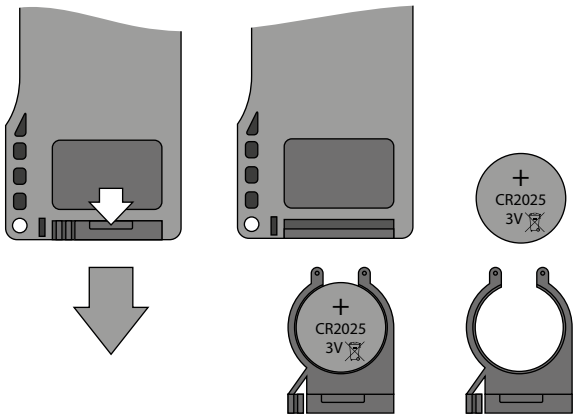

POSSIBLE FAULTS AND TROUBLESHOOTING

Problem	Possible reasons	Troubleshooting
When switching on the ventilator, the fan does not start.	No power supply.	Make sure the power supply line is connected correctly, otherwise troubleshoot the connection error.
	The motor is jammed, the impeller blades are clogged.	Turn the ventilator off. Troubleshoot the motor jam and impeller clogging. Clean the blades. Turn the ventilator on.
Circuit breaker tripping when the ventilator starts running.	Overcurrent as a result of short circuit in the electric circuit.	Turn the ventilator off. Contact the Seller for further information.
Low air flow.	Low set fan speed.	Set higher speed.
	The filters, the fan or the regenerator are clogged.	Clean or replace the filter. Clean the fan and the regenerator.
Increased noise, vibration.	The impeller is clogged.	Clean the impeller.
	Loose fastening of the ventilator casing or the outer ventilation hood.	Tighten the screws of the ventilator or the outer ventilation hood.

STORAGE AND TRANSPORTATION REGULATIONS

- Store the unit in the manufacturer's original packaging box in a dry closed ventilated premise with temperature range from +5 ˚C to +40 ˚C and relative humidity up to 70 %.
- Storage environment must not contain aggressive vapors and chemical mixtures provoking corrosion, insulation, and sealing deformation.
- Use suitable hoist machinery for handling and storage operations to prevent possible damage to the unit.
- Follow the handling requirements applicable for the particular type of cargo.
- The unit can be carried in the original packaging by any mode of transport provided proper protection against precipitation and mechanical damage. The unit must be transported only in the working position.
- Avoid sharp blows, scratches, or rough handling during loading and unloading.
- Prior to the initial power-up after transportation at low temperatures, allow the unit to warm up at operating temperature for at least 3-4 hours.

MANUFACTURER'S WARRANTY

The product is in compliance with EU norms and standards on low voltage guidelines and electromagnetic compatibility. We hereby declare that the product complies with the provisions of Electromagnetic Compatibility (EMC) Directive 2014/30/EU of the European Parliament and of the Council, Low Voltage Directive (LVD) 2014/35/EU of the European Parliament and of the Council and CE-marking Council Directive 93/68/EEC. This certificate is issued following test carried out on samples of the product referred to above.
The manufacturer hereby warrants normal operation of the unit for 24 months after the retail sale date provided the user's observance of the transportation, storage, installation, and operation regulations. Should any malfunctions occur in the course of the unit operation through the Manufacturer's fault during the guaranteed period of operation, the user is entitled to get all the faults eliminated by the manufacturer by means of warranty repair at the factory free of charge. The warranty repair includes work specific to elimination of faults in the unit operation to ensure its intended use by the user within the guaranteed period of operation. The faults are eliminated by means of replacement or repair of the unit components or a specific part of such unit component.

The warranty repair does not include:
- routine technical maintenance
- unit installation/dismantling
- unit setup

To benefit from warranty repair, the user must provide the unit, the user's manual with the purchase date stamp, and the payment paperwork certifying the purchase. The unit model must comply with the one stated in the user's manual. Contact the Seller for warranty service.

The manufacturer's warranty does not apply to the following cases:
- User's failure to submit the unit with the entire delivery package as stated in the user's manual including submission with missing component parts previously dismounted by the user.
- Mismatch of the unit model and the brand name with the information stated on the unit packaging and in the user's manual.
- User's failure to ensure timely technical maintenance of the unit.
- Damage to the unit casing and internal components caused by the user.
- Redesign or engineering changes to the unit.
- Replacement and use of any assemblies, parts and components not approved by the manufacturer.
- Unit misuse.
- Violation of the unit installation regulations by the user.
- Violation of the unit control regulations by the user.
- Unit connection to power mains with a voltage different from the one stated in the user's manual.
- Unit breakdown due to voltage surges in power mains.
- Discretionary repair of the unit by the user.
- Unit repair by any persons without the manufacturer's authorization.
- Expiration of the unit warranty period.
- Violation of the unit transportation regulations by the user.
- Violation of the unit storage regulations by the user.
- Wrongful actions against the unit committed by third parties.
- Unit breakdown due to circumstances of insuperable force (fire, flood, earthquake, war, hostilities of any kind, blockades).
- Missing seals if provided by the user's manual.
- Failure to submit the user's manual with the unit purchase date stamp.
- Missing payment paperwork certifying the unit purchase.

FOLLOWING THE REGULATIONS STIPULATED HEREIN WILL ENSURE A LONG AND TROUBLE-FREE OPERATION OF THE UNIT

USER'S WARRANTY CLAIMS SHALL BE SUBJECT TO REVIEW ONLY UPON PRESENTATION OF THE UNIT, THE PAYMENT DOCUMENT AND THE USER'S MANUAL WITH THE PURCHASE DATE STAMP

CERTIFICATE OF ACCEPTANCE

Unit Type	Single-room reversible energy recovery ventilator
Model	
Serial Number	
Manufacture Date	
Quality Inspector's Stamp	

SELLER INFORMATION

Seller	
Address	
Phone Number	
E-mail	
Purchase Date	
This is to certify acceptance of the complete unit delivery with the user's manual. The warranty terms are acknowledged and accepted.	
Customer's Signature	

Seller's Stamp

INSTALLATION CERTIFICATE

The _____ unit is installed pursuant to the requirements stated in the present user's manual.		
Company name		
Address		
Phone Number		
Installation Technician's Full Name		
Installation Date:	**Signature:**	
The unit has been installed in accordance with the provisions of all the applicable local and national construction, electrical and technical codes and standards. The unit operates normally as intended by the manufacturer.		
Signature:		

Installation Stamp

WARRANTY CARD

Unit Type	Single-room reversible energy recovery ventilator
Model	
Serial Number	
Manufacture Date	
Purchase Date	
Warranty Period	
Seller	

Seller's Stamp



BLAUBERG

Manufacturer: Ventilation Systems LLC,
Ukraine, Kyiv, 1 M. Kotsyubynskoho Street
Address of production facilities:
Ukraine, Kyiv Region, Fastiv District, Boyarka, 36 Sobornosti Street

blaubergventilatoren.net
B338EN-01