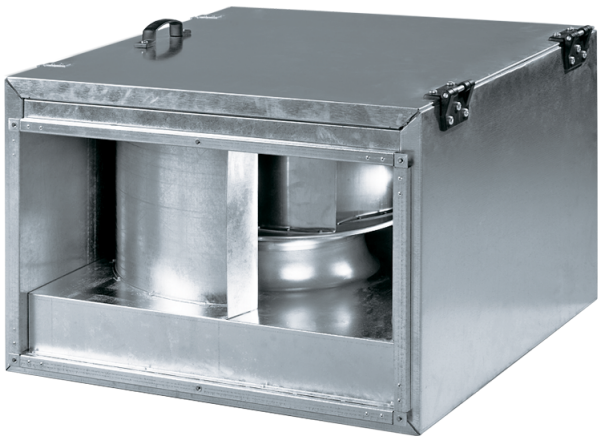

# Box-I 60x35 4E

Centrifugal inline fans with backward curved blades in sound-insulated casings

- Sound-insulated casing
- Impeller type: Centrifugal impeller with backward curved blades
- Casing material: Galvanized steel
- Installation in any position

| | Unit of measurement | Box-I 60x35 4E |
|---|---|---|
| Phases | - | 1 |
| Maximum supply voltage | V | 240 |
| Minimum supply voltage | V | 220 |
| Power supply frequency | Hz | 50/60 |
| Maximum airflow | m³/h | 2950 |
| Weight | kg | 56.2 |
| Transported air temperature (max) | °C | 80 |
| Transported air temperature (min) | °C | -30 |
| Ingress protection rating | - | IPX4 |
| Ingress protection rating of the drive | - | IP44 |
| Impeller material | - | Aluminium |

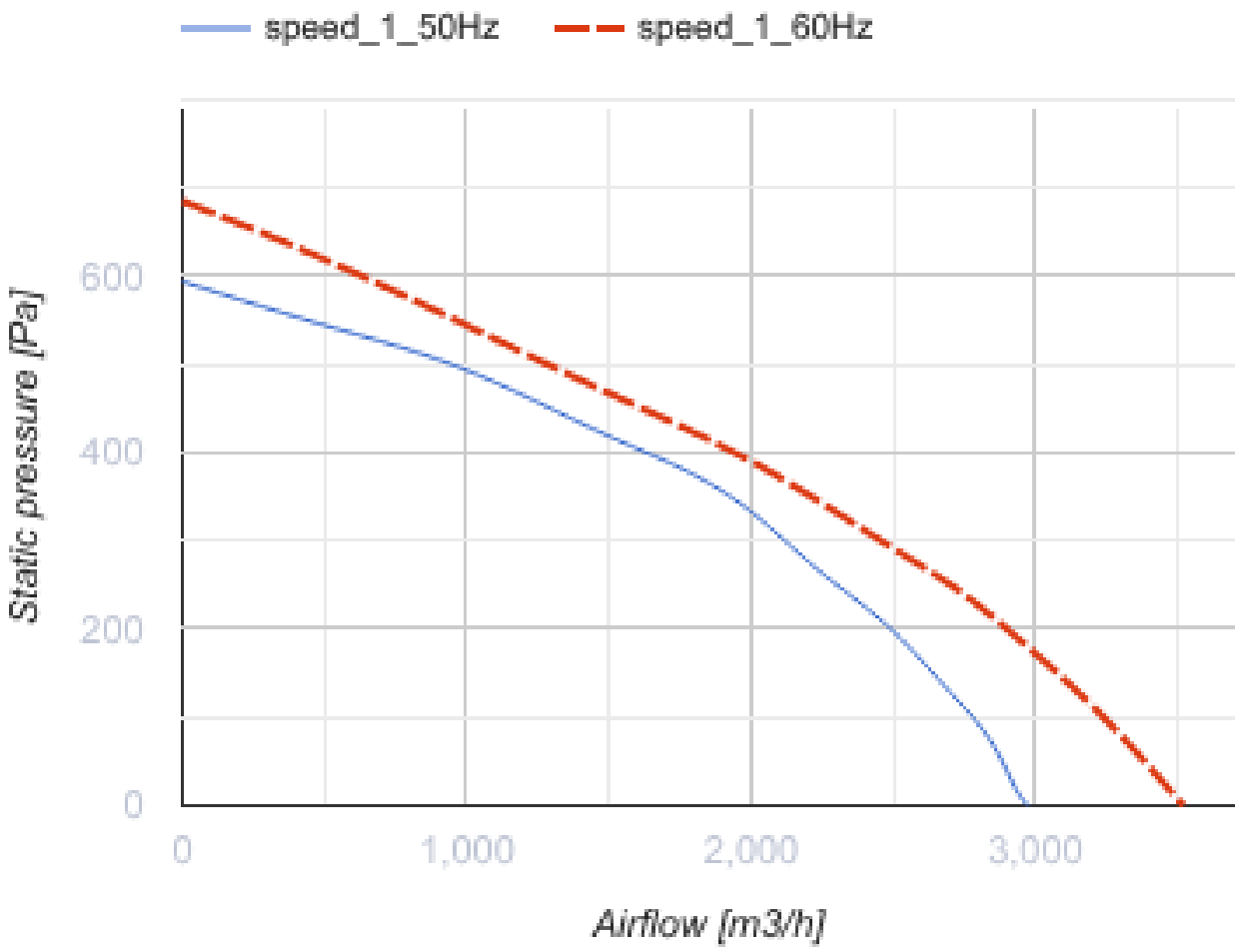
speed_1_50Hz
speed_1_60Hz
Static pressure [Pa]
600
400
200
0
0
1,000
2,000
3,000
Airflow [m3/h]

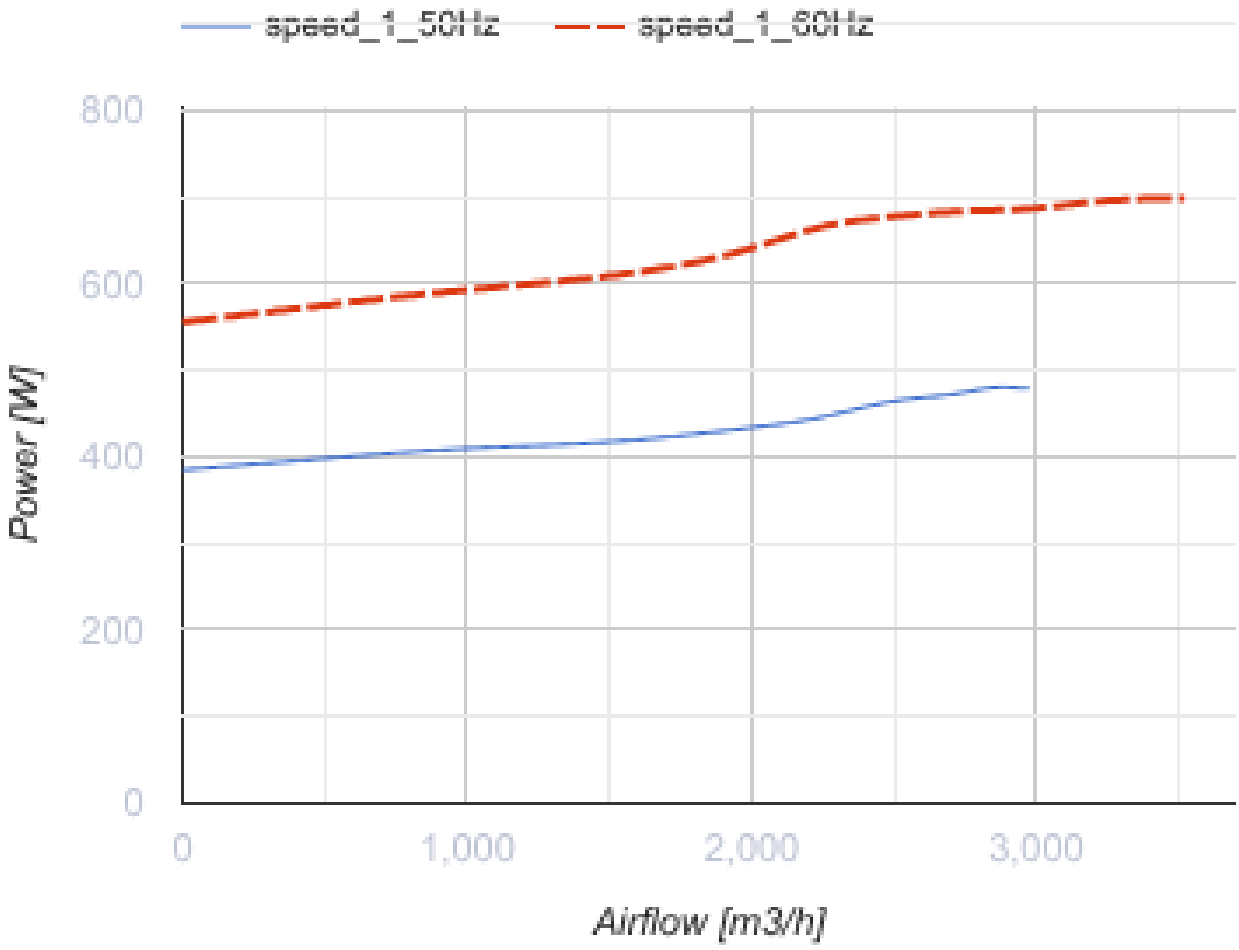


## Dimensions

| B | B1 | B2 | B3 | H | H1 | H2 | H3 | L |
|---|---|---|---|---|---|---|---|---|
| 600 | 620 | 640 | 700 | 350 | 370 | 390 | 530 | 735 |

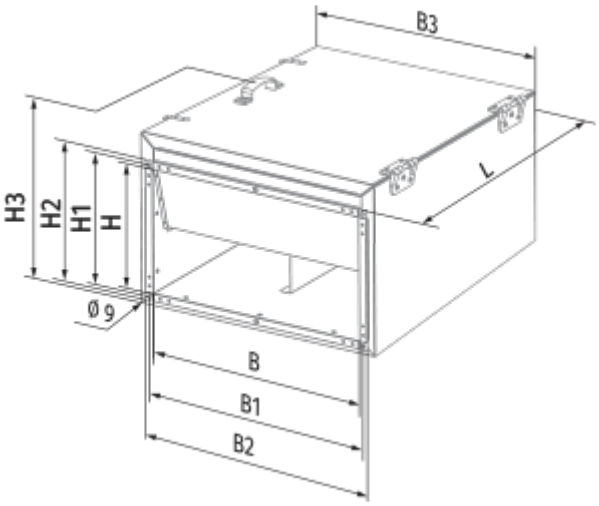
B3
L
H3
H2
H1
H
Ø 9
B
B1
B2

## Ecodesign

| | |
|---|---|
| Trademark | Blauberg |
| Model | Box-I 60x35 4E |
| Type of ventilation unit | Unidirectional |
| Type of drive installed | External MSD or VSD |
| Type of heat recovery system | None |
| Nominal external pressure (Pa) | 335 |
| Maximum external leakage rates (%) | 2.7 |
| Static efficiency (%) | 43.7 |
| Sound power level (dB(A)) | 79 |
| Effective electric power input (kW) | 0.43 |
| Declared typology | NRVU UVU |