

# EVH 200-1.7-1

Electric duct preheater for heat exchanger freeze protection

- Casing material: Galvanized steel

| | Unit of measurement | EVH 200-1.7-1 |
|---|---|---|
| Phases | - | 1 |
| Minimum supply voltage | V | 230 |
| Maximum supply voltage | V | 230 |
| Power supply frequency | Hz | 50/60 |

## Dimensions

| ØD | B | H | L | L1 |
|---|---|---|---|---|
| 199 | 195 | 337 | 306 | 190 |

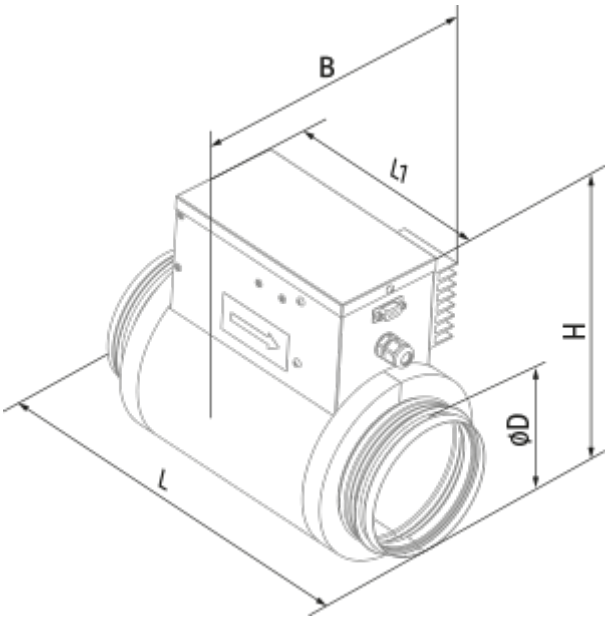
B
l1
H
ϕD
L