

# FQM 100

Spigot with a plate for round ducts

- Casing material: Coated steel

| | Unit of measurement | FQM 100 |
|---|---|---|

## Dimensions

| Ø D | a | b | L |
|---|---|---|---|
| 100 | 150 × 150 | 134 × 134 | 50 |

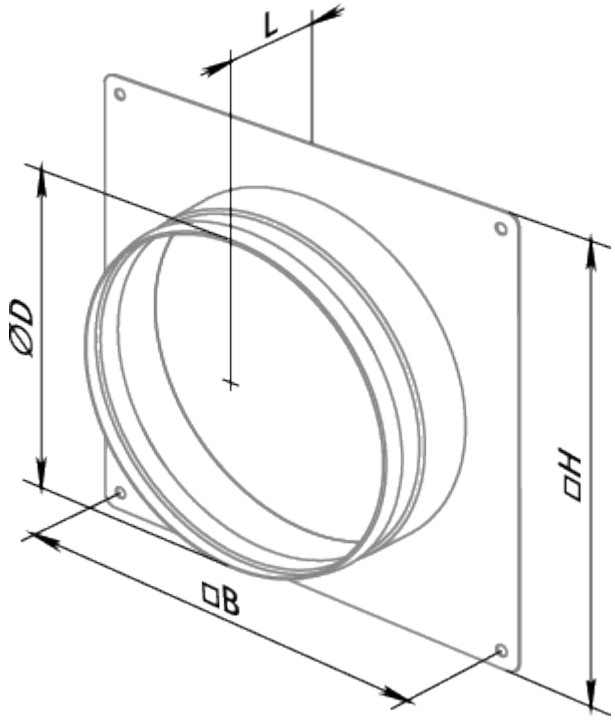
L
ØD
□H
□B