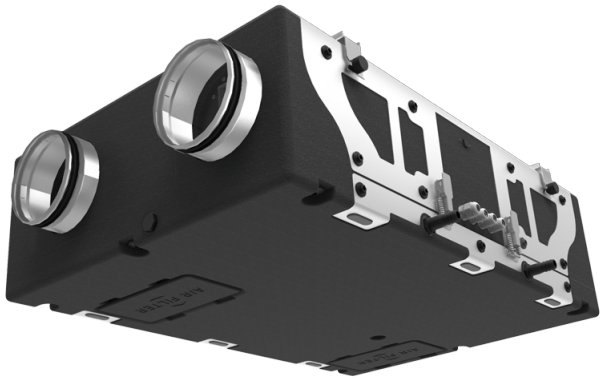

KOMFORT EC D5B 180-E S14

Heat and energy recovery air handling units

- Heat exchanger type: Counter flow
- Heat exchanger material: Enthalpy
- Sound-insulated casing
- Enthalpy heat exchanger
- Bypass: Manual
- Control: Wired control panel
- Casing material: EPP
- Installation in any position
- Humidity sensor: Optional
- CO2 sensor: Optional

	Unit of measurement	KOMFORT EC D5B 180-E S14
Phases	-	1
Minimum supply voltage	V	230
Maximum supply voltage	V	230
Power supply frequency	Hz	50/60
Maximum airflow	m³/h	220
Heat recovery efficiency, max	%	94
Heat exchanger type	-	Counter flow
Heat exchanger material	-	Enthalpy
Weight	kg	14
Transported air temperature (max)	°C	40
Transported air temperature (min)	°C	-25
Ambient air temperature min	°C	1
Ambient air temperature max	°C	40
Ingress protection rating	-	IP22
Ingress protection rating of the drive	-	IP44
Ambient air humidity max	%	60

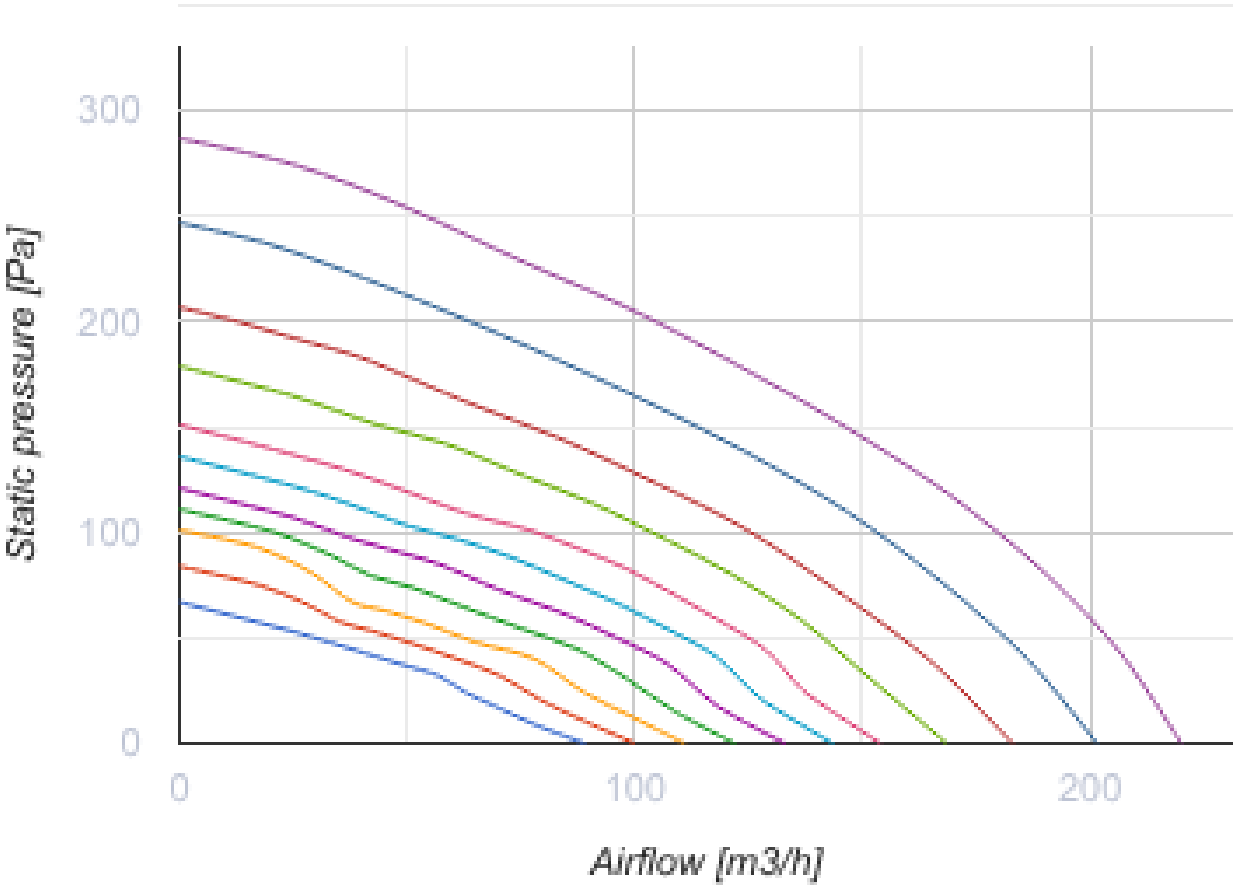
300
200
100
0
Static pressure [Pa]
0
100
200
Airflow [m3/h]

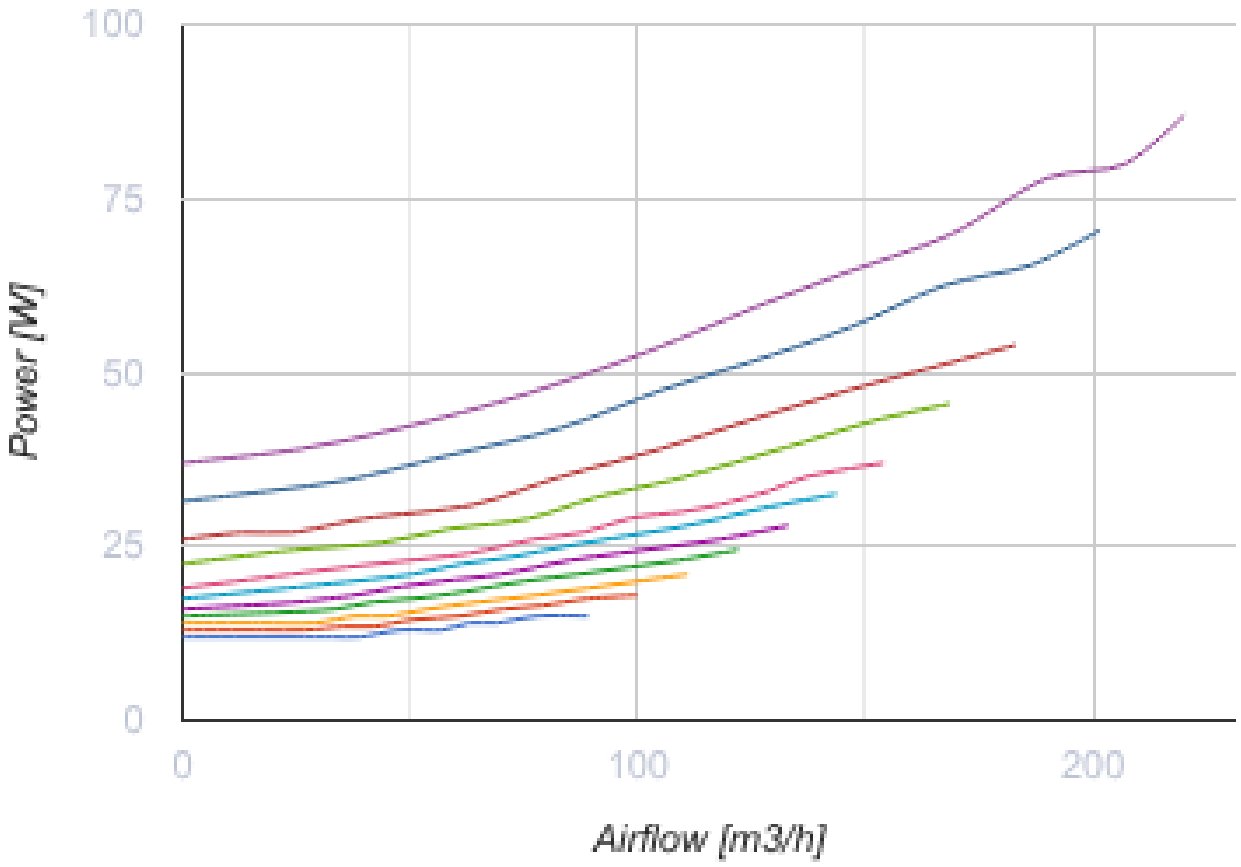

Dimensions

Ø D	Ø D1	B	B1	B2	B3	L	L1	L2	H	H1	H2
150	–	650	600	326	163	900	1009	302	264	110	–

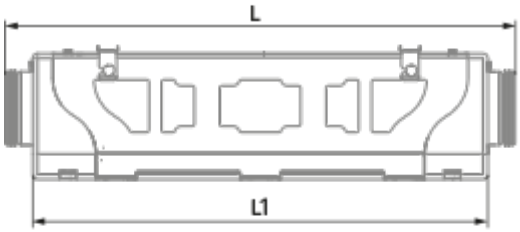
L
L1

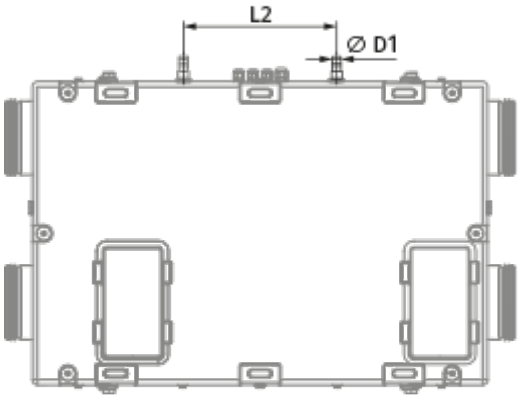
L2
Ø D1

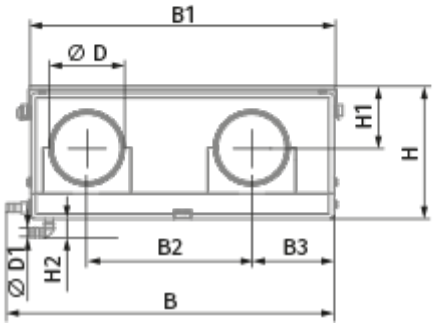
B1
Ø D
H1
H
Ø D1
H2
B2
B3
B

Ecodesign

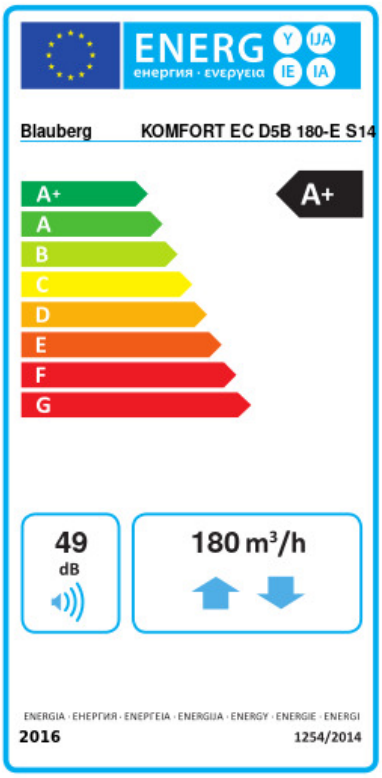

Trademark	Blauberg					
Model	KOMFORT EC D5B 180-E S14					
Specific energy consumption (SEC) (kWh/(m²/a))	Cold		Average		Warm	
	0	A+	0	A+	0	E
Type of ventilation unit	Bidirectional					
Type of drive installed	Variable speed					
Type of heat recovery system	Recuperative					
Thermal efficiency of heat recovery (%)	0					
Maximum flow rate (m³/h)	0					
Electric power input (W)	0					
Reference flow rate (m³/s)	0					
Reference pressure difference (Pa)	0					
Specific power input (SPI) (W/(m³/h))	0					
Control typology	Local demand control					
Maximum internal leakage rates (%)	0					
Maximum external leakage rates (%)	0					
Declared typology	RVU BVU					
Sound power level (dB(A))	0					
The annual electricity consumption (AEC) (kWh/a)	Cold		Average		Warm	
	0		0		0	
The annual heating saved (AHS) (kWh/a)	Cold		Average		Warm	
	0		0		0	

Accessories

CO2 sensors

Name	Photo	Description
CD-1		CO2 sensors
CD-2		CO2 sensors

Humidity sensors

Name	Photo	Description
FS2		Humidity sensor

Other accessories

Name	Photo	Description
FP 214x186x48 F7		F7 panel filter
FP 214x186x18 G4		G4 panel filter