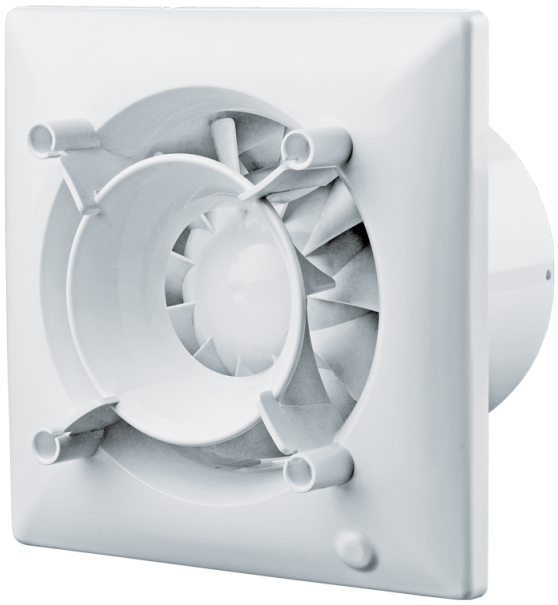

Omega 125 (220-240V/60Hz) S

Quiet extract fan

- Impeller type: Mixed-flow
- Casing material: Plastic
- Backdraft protection: Backdraft damper
- Pull cord

	Unit of measurement	Omega 125 (220-240V/60Hz) S
Minimum supply voltage	V	220
Maximum supply voltage	V	240
Power supply frequency	Hz	60
Ambient air temperature min	°C	1
Ambient air temperature max	°C	40
Ingress protection rating	-	IP44
Impeller material	-	Plastic

Dimensions

a	Ød	b	c
180	124	85	36

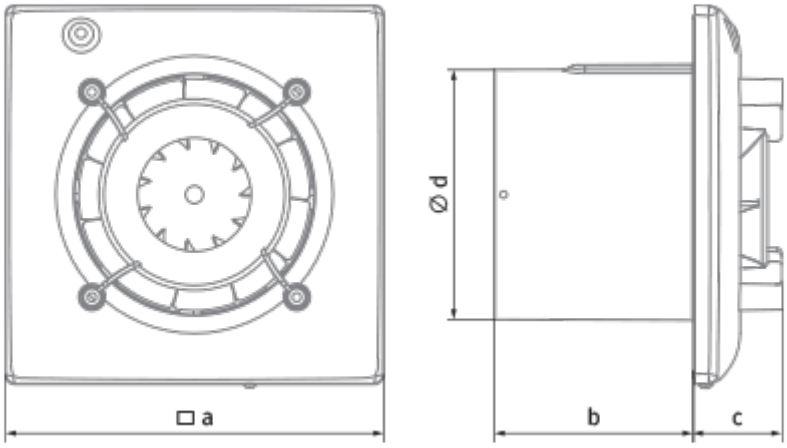

Accessories

Decorative panels

Name	Photo	Description
DP 180 Plan		Design Konzept System panels are the finishing touch of your home's ventilation design
DP 180 Plan Red		Design Konzept System panels are the finishing touch of your home's ventilation design
DP 180 Plan Cosmos Black		Design Konzept System panels are the finishing touch of your home's ventilation design
DP 180 Platinum		Design Konzept System panels are the finishing touch of your home's ventilation design
DP 180 Shield		Design Konzept System panels are the finishing touch of your home's ventilation design
DP 180 Bavaria		Design Konzept System panels are the finishing touch of your home's ventilation design
DP 180 Hi-Fi		Design Konzept System panels are the finishing touch of your home's ventilation design
DP 180 Moon		Design Konzept System panels are the finishing touch of your home's ventilation design
DP 180 Chrome		Design Konzept System panels are the finishing touch of your home's ventilation design

DP 180 Hi-Tech		Design Konzept System panels are the finishing touch of your home's ventilation design
DPO 125/180 Glas		Design Konzept System panels are the finishing touch of your home's ventilation design
DPO 125/180 Glas Red		Design Konzept System panels are the finishing touch of your home's ventilation design
DPO 125/180 Glas Black		Design Konzept System panels are the finishing touch of your home's ventilation design