

Primo EC 125

Mixed-flow inline fans with EC-motors

- Impeller type: Mixed-flow
- Casing material: Polypropylene
- Installation in any position

	Unit of measurement	Primo EC 125
Phases	-	1
Minimum supply voltage	V	230
Maximum supply voltage	V	230
Power supply frequency	Hz	50/60
Maximum airflow	m^3/h	375
Weight	kg	3.68
Transported air temperature (max)	°C	55
Transported air temperature (min)	°C	-25
Ingress protection rating	-	IPX4
Ingress protection rating of the drive	-	IP44
Impeller material	-	Plastic

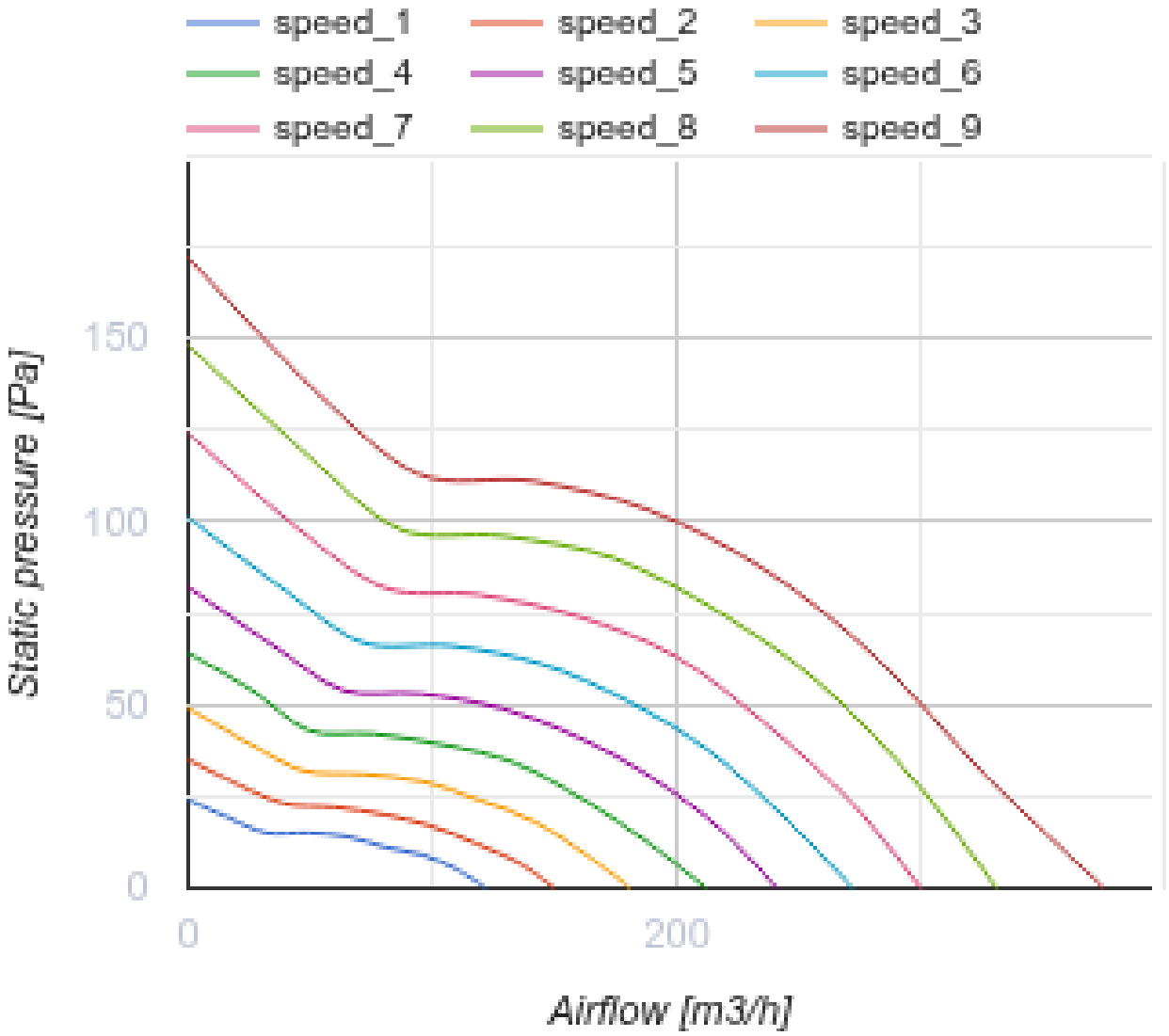
speed_1
speed_2
speed_3
speed_4
speed_5
speed_6
speed_7
speed_8
speed_9
Static pressure [Pa]
150
100
50
0
0
200
Airflow [m3/h]

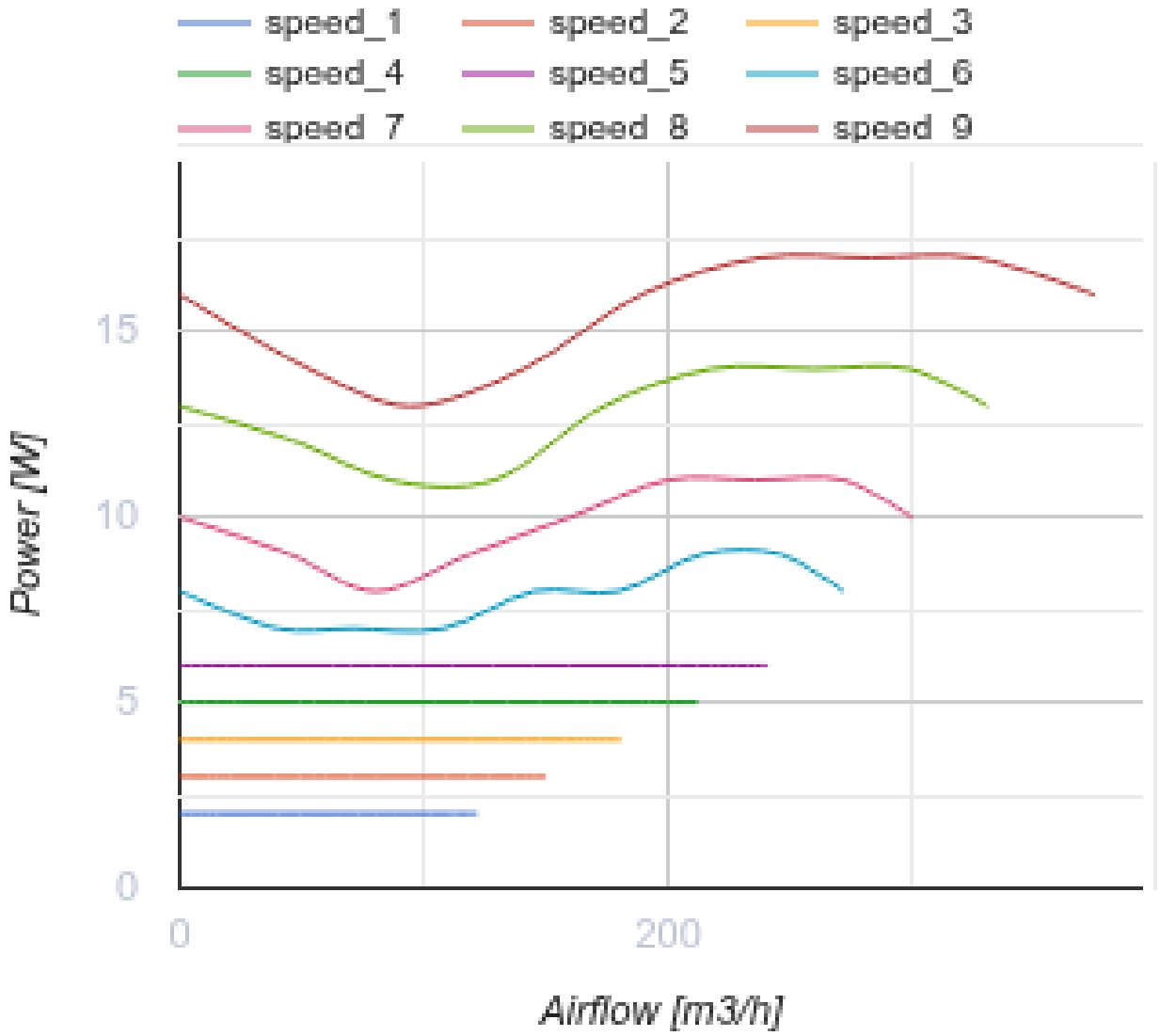

Dimensions

A	B	C	Ø D
242	300	226	125

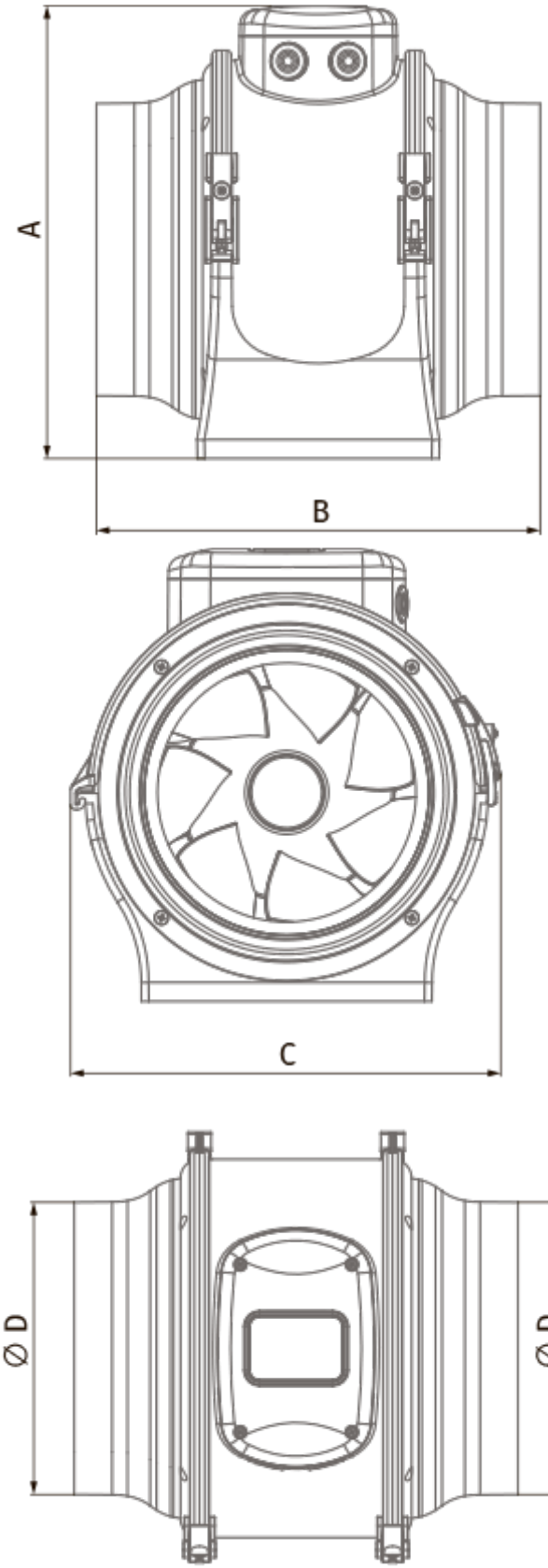
A
B
C
∅ D
∅ D

Accessories

Fittings

Name	Photo	Description
K 125		Clamp for round flexible ducts