

Qubit-E 55/110 IR

High-pressure extract centrifugal Qubit fans for air duct systems of high durability

- Casing material: Plastic
- Backdraft protection: Backdraft damper
- Motion sensor
- Timer: Internal timer, Turn off timer, Turn on timer

	Unit of measurement	Qubit-E 55/110 IR	
Speed	-	1	2
Minimum supply voltage	V	220	
Maximum supply voltage	V	240	
Power supply frequency	Hz	50	
Maximum airflow	m^3/h	55	110
Ambient air temperature min	°C	1	
Ambient air temperature max	°C	40	
Ingress protection rating	-	IP45	

Dimensions

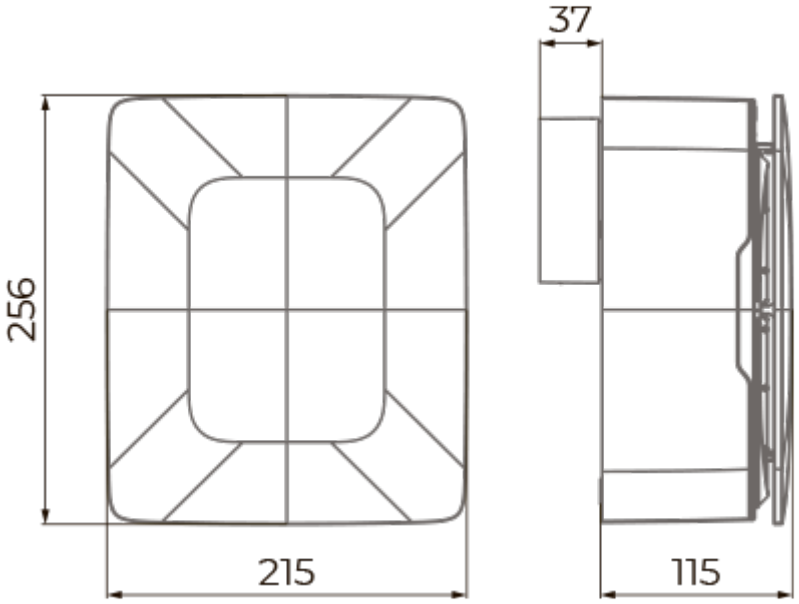
37
256
215
115

Ecodesign

Trademark	Blauberg					
Model	Qubit-E 55/110 IR					
Specific energy consumption (SEC) (kWh/(m²/a))	Cold		Average		Warm	
	-49.9	A+	-22.8	D	-7.3	F
Type of ventilation unit	Unidirectional					
Type of drive installed	2-speed					
Type of heat recovery system	None					
Maximum flow rate (m³/h)	72					
Electric power input (W)	23					
Reference flow rate (m³/s)	0.01					
Reference pressure difference (Pa)	50					
Specific power input (SPI) (W/(m³/h))	0.292					
Control typology	Local demand control					
Maximum external leakage rates (%)	2.7					
Declared typology	RVU UVU					
Sound power level (dB(A))	40					
The annual electricity consumption (AEC) (kWh/a)	Cold		Average		Warm	
	218		218		218	
The annual heating saved (AHS) (kWh/a)	Cold		Average		Warm	
	5536		2830		1280	