

# Reneo S 550 R S21

Heat and energy recovery air handling units

- Heat exchanger type: Counter flow
- Heat exchanger material: Polystyrene
- Sound-insulated casing
- Bypass: Auto
- Reheater: Optional
- BMS protocol: ModBus
- Control: Smartphone
- Casing material: EPP
- Humidity sensor: Optional
- CO2 sensor: Optional
- PM2.5 sensor: Optional

| | Unit of measurement | Reneo S 550 R S21 |
|---|---|---|
| Phases | - | 1 |
| Maximum supply voltage | V | 230 |
| Minimum supply voltage | V | 230 |
| Power supply frequency | Hz | 50/60 |
| Maximum airflow | $m^3/h$ | 720 |
| Heat recovery efficiency, max | % | 93 |
| Heat exchanger type | - | Counter flow |
| Heat exchanger material | - | Polystyrene |
| Weight | kg | 52 |
| Transported air temperature (max) | °C | 40 |
| Transported air temperature (min) | °C | -25 |
| Ambient air temperature max | °C | 40 |
| Ambient air temperature min | °C | 1 |
| Ingress protection rating | - | IP22 |
| Ambient air humidity max | % | 60 |
| Ingress protection rating of the drive | - | IP44 |

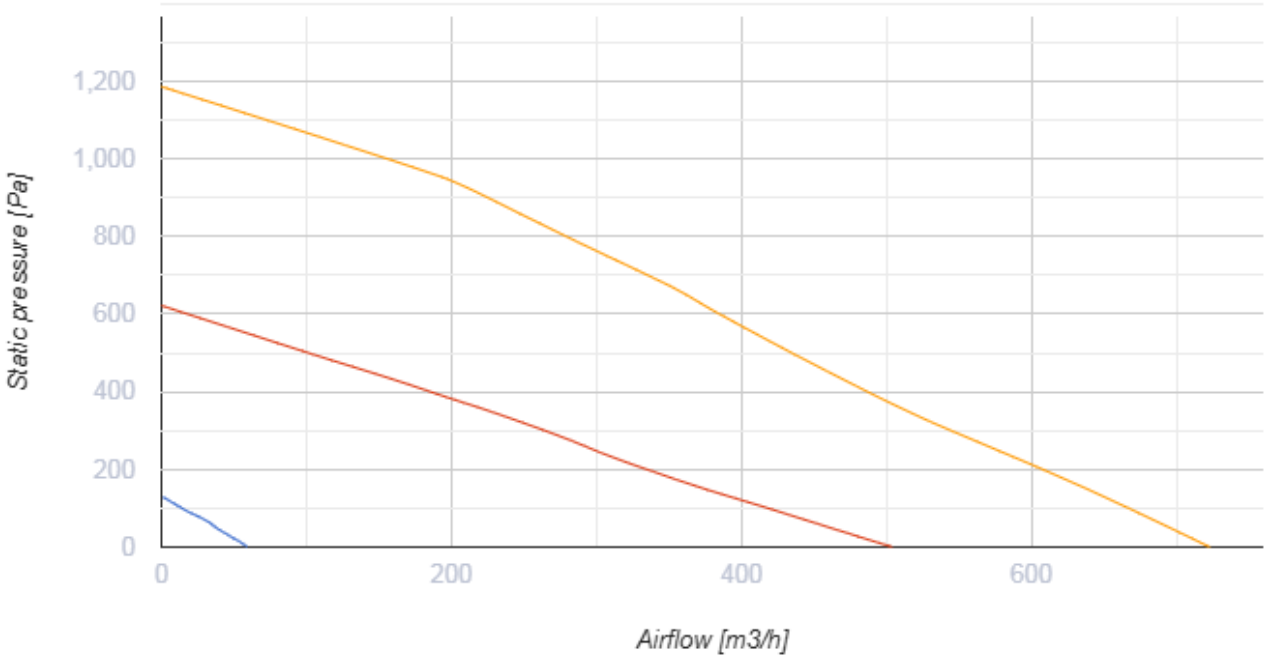


## Dimensions

| Ø D | H | H1 | L | L1 | W | W1 |
|---|---|---|---|---|---|---|
| 200 | 885 | 943 | 711 | 250 | 830 | 365 |

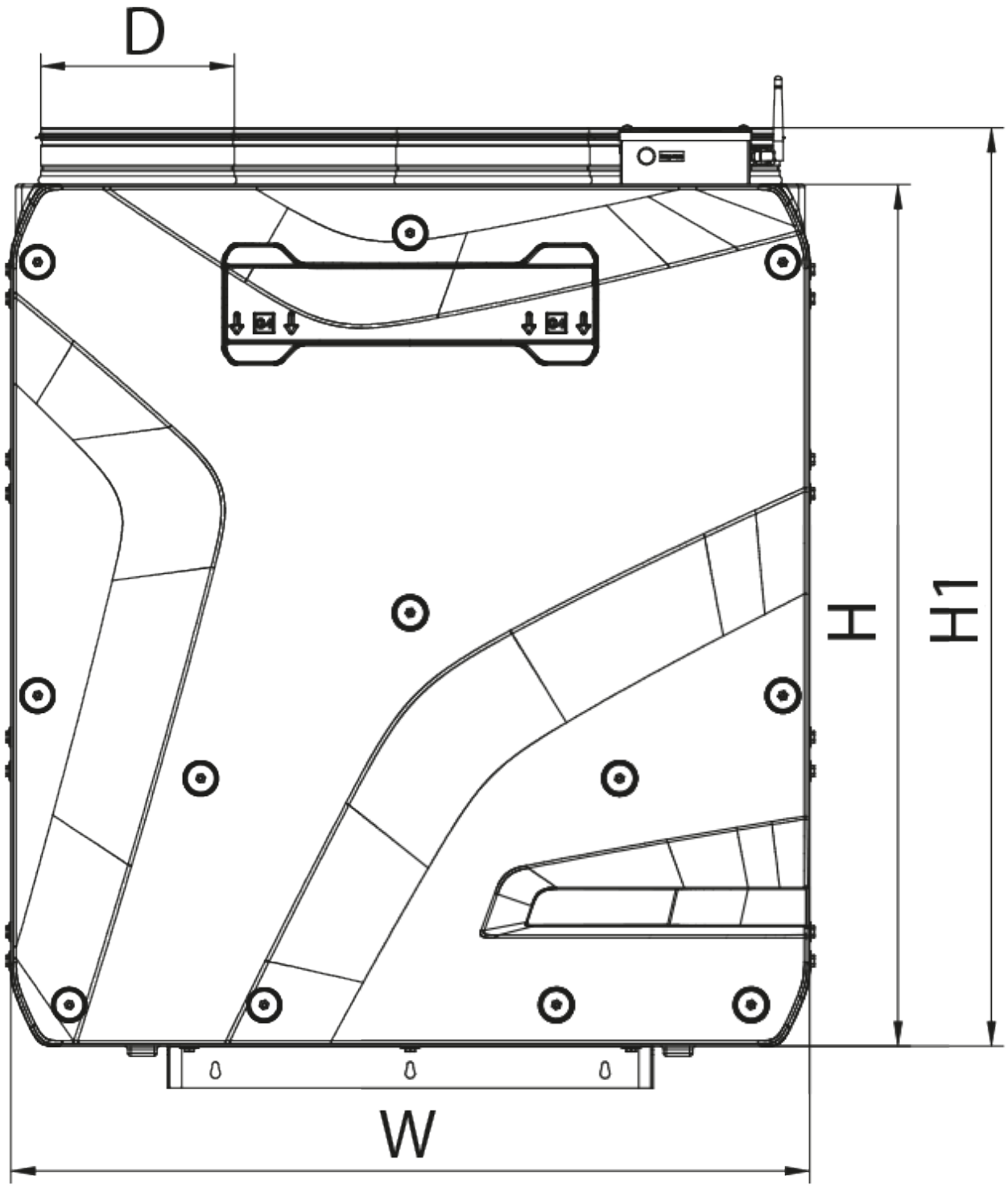
D
H
H1
W

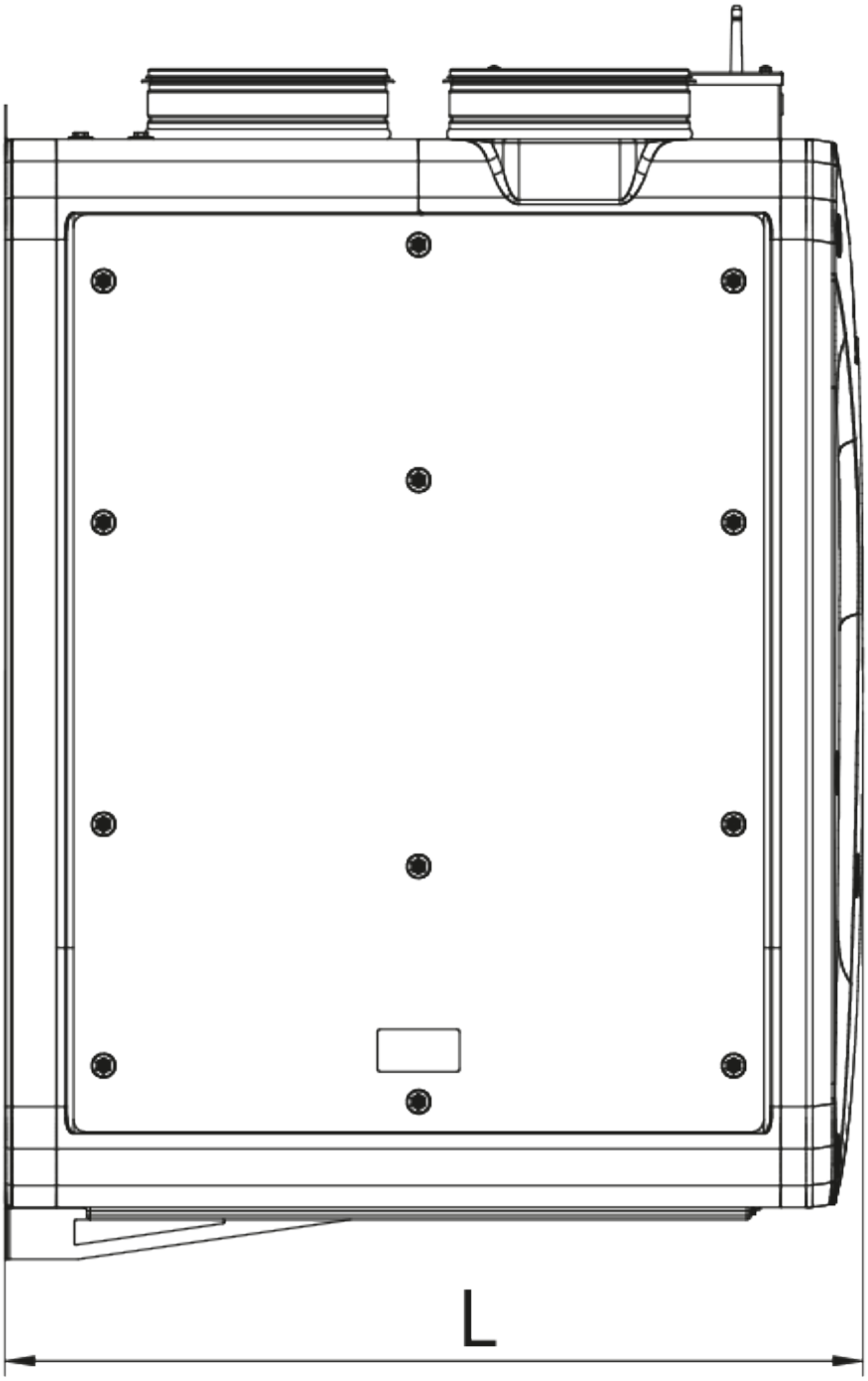
L

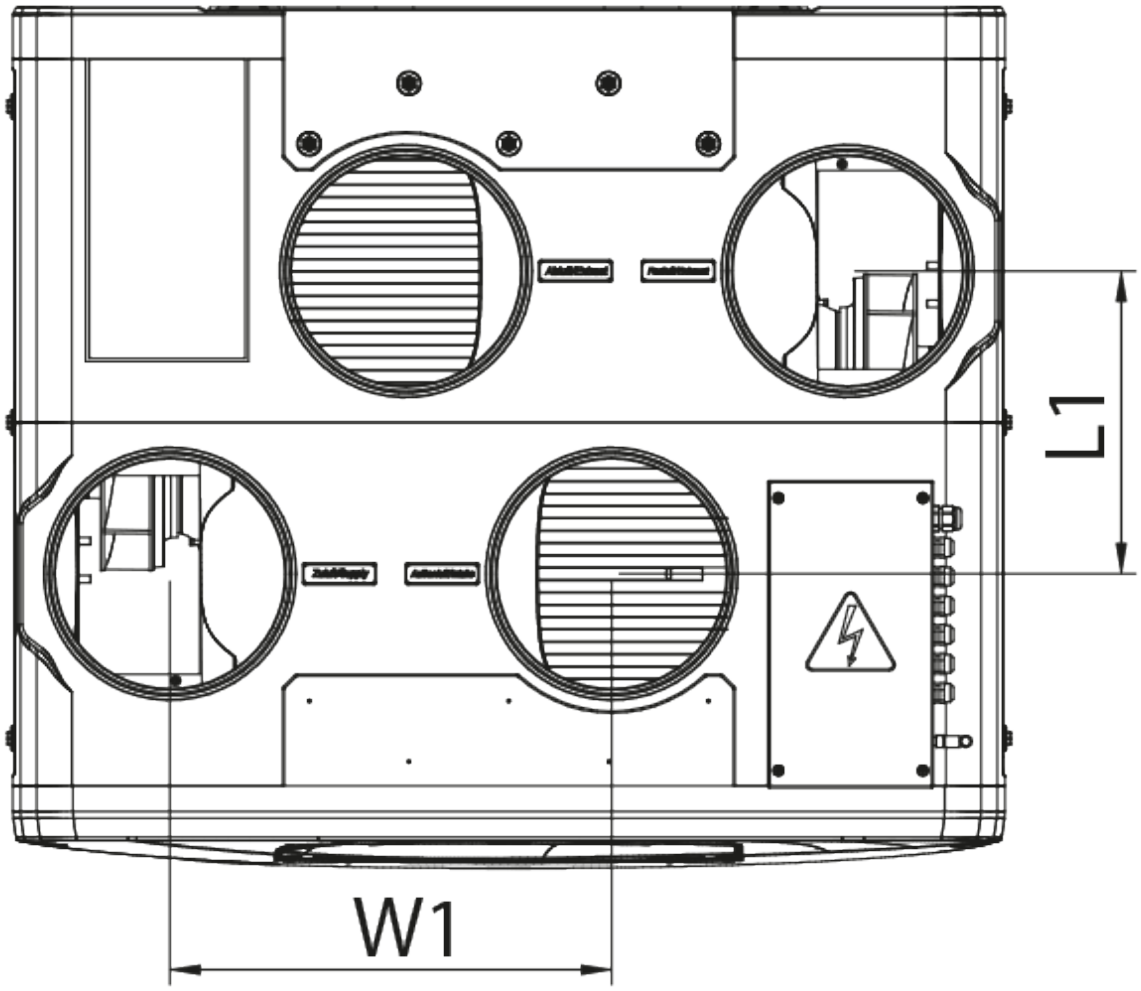
L1
W1

## Ecodesign

| Trademark | Blauberg | | | | | |
|---|---|---|---|---|---|---|
| Model | Reneo S 550 R S21 | | | | | |
| Specific energy consumption (SEC) (kWh/(m²/a)) | Cold | | Average | | Warm | |
| | -80.9 | A+ | -42.2 | A+ | -17.3 | E |
| Type of ventilation unit | Bidirectional | | | | | |
| Type of drive installed | Variable speed | | | | | |
| Type of heat recovery system | Recuperative | | | | | |
| Thermal efficiency of heat recovery (%) | 86 | | | | | |
| Maximum flow rate (m³/h) | 667 | | | | | |
| Electric power input (W) | 341 | | | | | |
| Reference flow rate (m³/s) | 0.128 | | | | | |
| Reference pressure difference (Pa) | 50 | | | | | |
| Specific power input (SPI) (W/(m³/h)) | 0.265 | | | | | |
| Control typology | Local demand control | | | | | |
| Maximum internal leakage rates (%) | 2.7 | | | | | |
| Maximum external leakage rates (%) | 2.7 | | | | | |
| Sound power level (dB(A)) | 58 | | | | | |
| The annual electricity consumption (AEC) (kWh/a) | Cold | | Average | | Warm | |
| | 722 | | 185 | | 140 | |
| The annual heating saved (AHS) (kWh/a) | Cold | | Average | | Warm | |
| | 9019 | | 4610 | | 2085 | |

## Accessories

### Condensation drainage

| Name | Photo | Description |
|---|---|---|
| SFK 20x32 |  | Hydraulic syphon for condensate drainage |

### Control Panels

| Name | Photo | Description |
|---|---|---|

| | | |
|---|---|---|
| S25 |  | LCD control panel |
| S22 |  | Control panels |
| S22 Wi-Fi |  | Control panels |

### CO2 sensors

| Name | Photo | Description |
|---|---|---|
| CD-1 |  | CO2 sensors |
| CD-2 |  | CO2 sensors |

### Humidity sensors

| Name | Photo | Description |
|---|---|---|
| FS2 |  | Humidity sensor |

### Other accessories

| Name | Photo | Description |
|---|---|---|
| FP 596x164x60 ePM1 60% F7 |  | F7 panel filter |
| FP 596x164x60 Coarse 90% G4 |  | G4 panel filter |

### Electric actuators

| Name | Photo | Description |
|---|---|---|

| | | |
|---|---|---|
| Belimo TF230 |  | Electric actuators |