

# S-Vent 180x74-0,55-4D-R90

Radial fans

• Impeller type: Centrifugal impeller with forward curved blades
• Casing material: Coated steel

| | Unit of measurement | S-Vent 180x74-0,55-4D-R90 |
|---|---|---|
| Phases | - | 3 |
| Maximum supply voltage | V | 400 |
| Minimum supply voltage | V | 400 |
| Power supply frequency | Hz | 50 |
| Maximum airflow | m³/h | 1030 |
| Weight | kg | 13.5 |
| Transported air temperature (max) | °C | 60 |
| Ingress protection rating | - | IP54 |
| Ingress protection rating of the drive | - | IP54 |
| Impeller material | - | Galvanized steel |

## Dimensions

| Ø D | Ø d | Ø D1 | B | H | H1 | H2 | L | L1 | L2 | P | M | I | G | K | S |
|---|---|---|---|---|---|---|---|---|---|---|---|---|---|---|---|
| 180 | 10 | 10 | 311 | 414 | 143 | 120 | 365 | 143 | 114 | 146 | 270 | 270 | 22 | 314 | 90 |

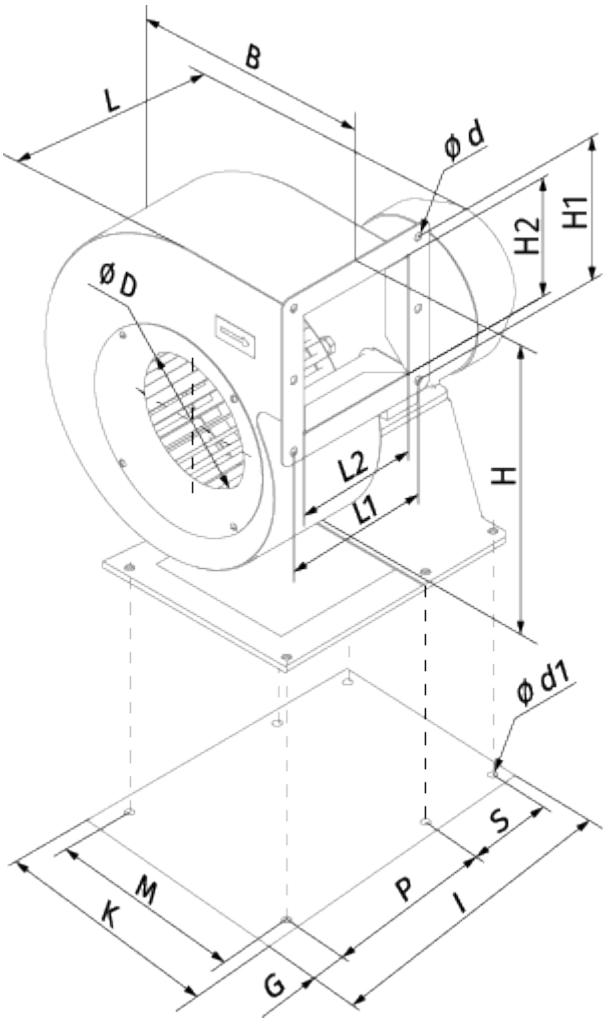
B
L
ø d
H2
H1
ø D
L2
L1
H
ø d1
S
M
K
P
I
G